ISH® (Wire-to-Wire Type)

耐高温・耐振動性に優れた電線対電線中継接続コネクタ

Product Specifications:		Single-row	Double-row
Pitch (mm max.)		2.0	
Contact Size (mm)		0.5 × 0.4(020)	
Mated Height (mm max.)		8.0	11.7
Width formula (mm)		4.9+2.0*?pin	5.3+1.0*?pin
Operating Temperature		-40 - 125°C	
Vioration Resistance		10G	
Current Rating		4.5A per pin	
Voltage Rating		100V	
Withstand Voltage		AC 1000V/minute	
Plating		Sn	
Housing		Male:glass-filled LCP, Female:PBT	
Pin counts	Range	Up to 40	Up to 40
	Available	3	8

Applicable Cable Size:

AWG#22,#20 *Insulation Diameter 1.6 mm max.

*記載のない極数の対応状況についてはお問い合わせください。

高い接触信頼性を求める機器に最適な優れた耐高温性・耐振動性

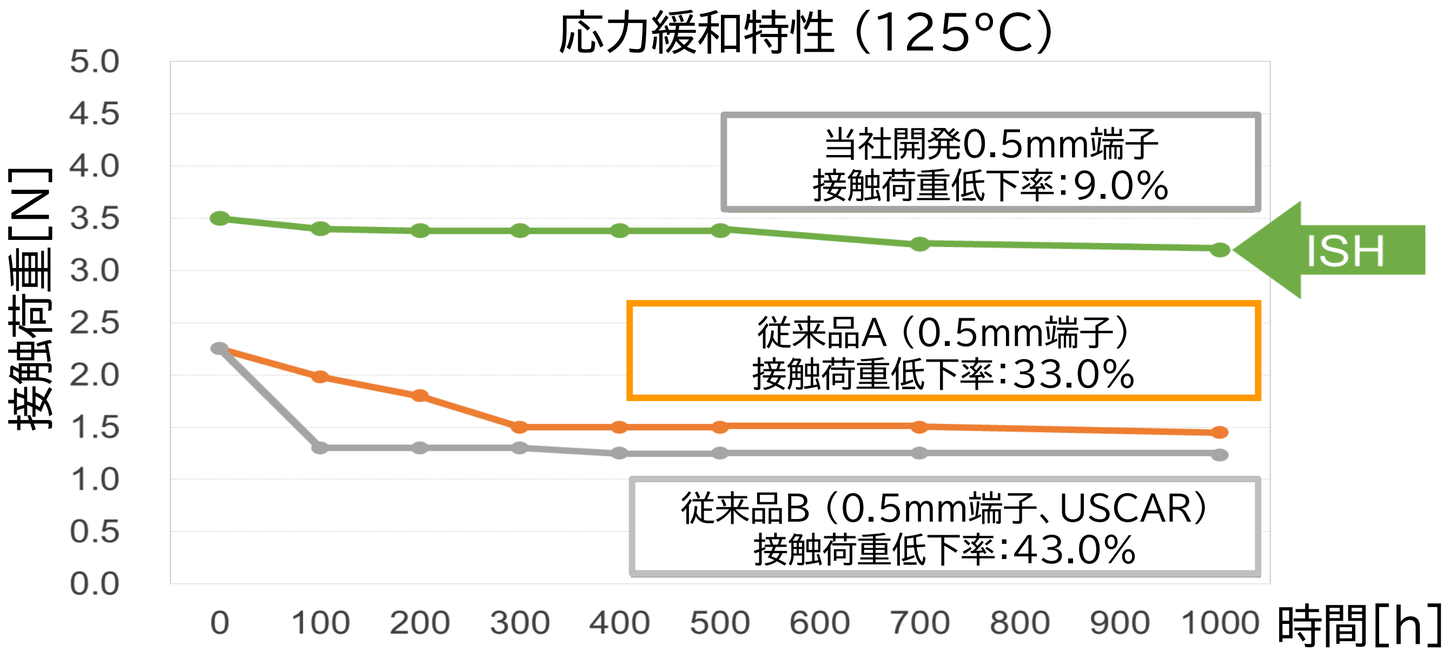

独自のバネ構造端子による高い長期接触信頼性

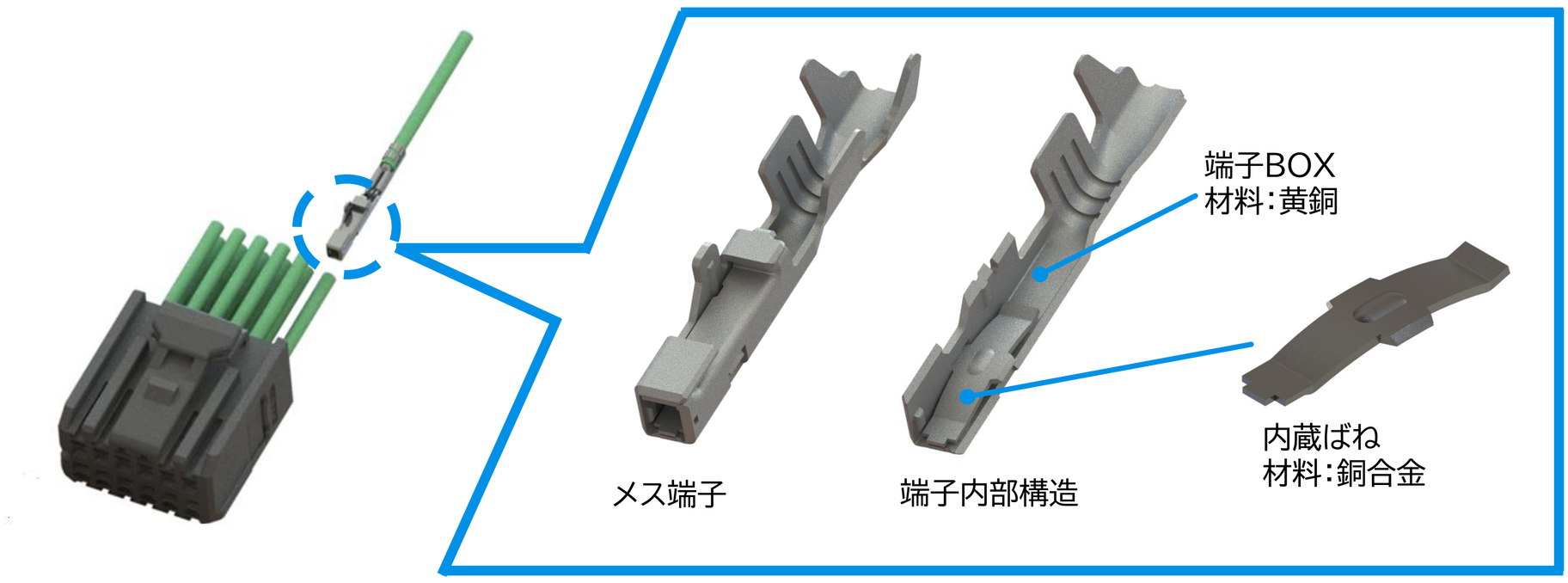

各種車載スペックに適合、高温・振動環境の産業用途等に最適

- ヘッドライト
- インバータ & DC/DC コンバータ
- バッテリーコントロールモジュール
- リアカメラモジュール
- 車載インフォテインメント
- ロボット部品
- 工場自動化装置

Component Parts Details

ISH® (Wire-to-Wire Type) MALE (SINGLE ROW):

PART NO.
V0112-91003-01

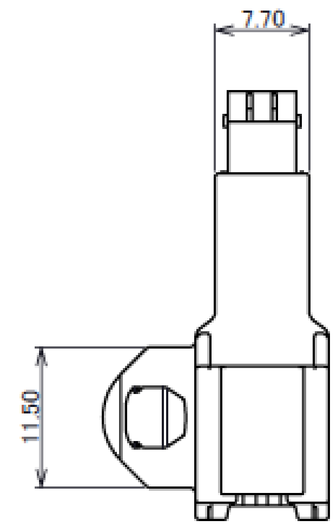

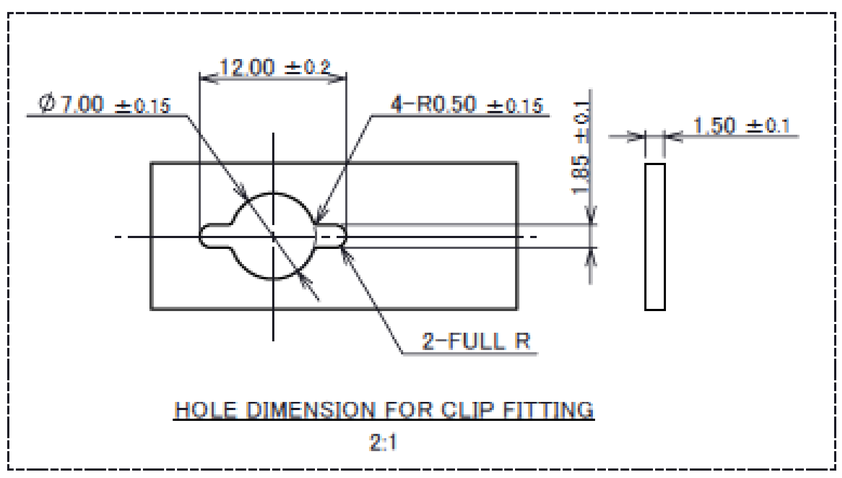

HOLE DIMENSION FOR CLIP FITTING
2:1

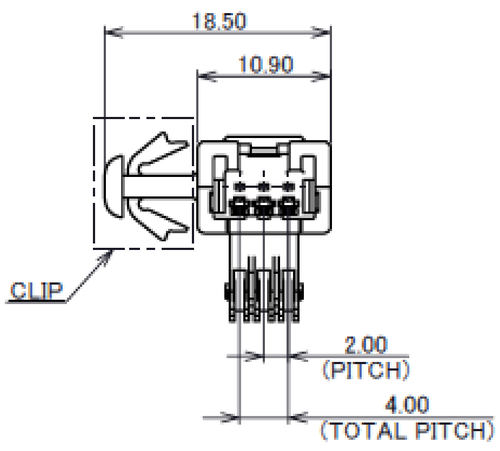

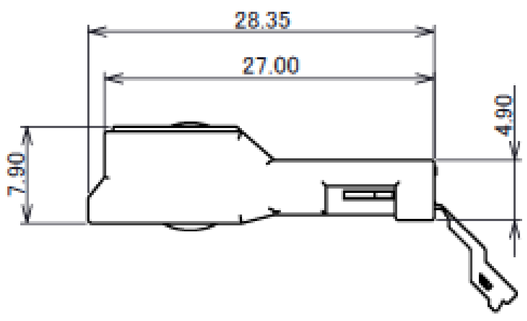

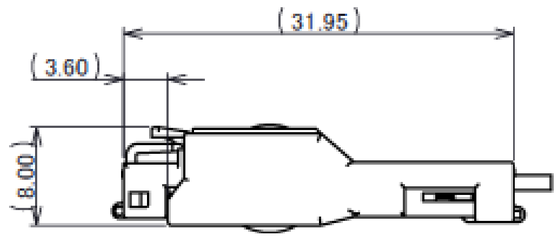

MATING STATE
2:1

NOTES
1.INLINE MALE TERMINAL PART NO.:VT010-01
2.FEMALE CONNECTOR
FEMALE HOUSING PART NO.:V0113-91003-01
FEMALE TERMINAL PART NO.:VT009-02
3.COMPLY WITH ELV/RoHS
4.HANDLE THE PRODUCT IN COMPLIANCE WITH HANDLING MANUAL【HDM-0024】

1	MALE HOUSING	PBT	BLACK/UL94HB
NO.	DESCRIPTION	MATERIAL	FINISH/COLOR/REMARKS

Rev.0

ISH® (Wire-to-Wire Type) MALE (DOUBLE ROWS):

PART NO.	KEY CODING
V0031-008B-201	KEY CODING-A
V0031-008B-202	KEY CODING-B

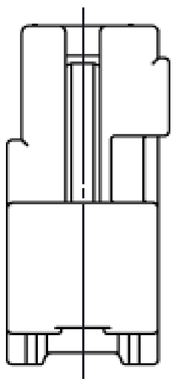

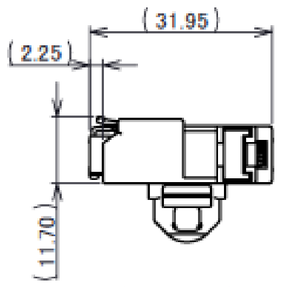

MATING STATE
2:1

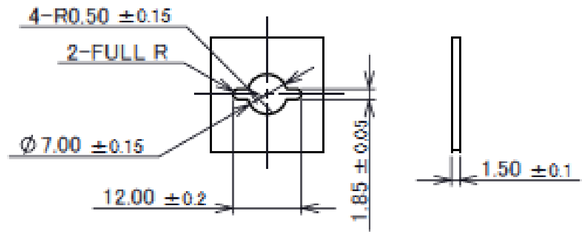

HOLE DIMENSION FOR CLIP FITTING
2:1

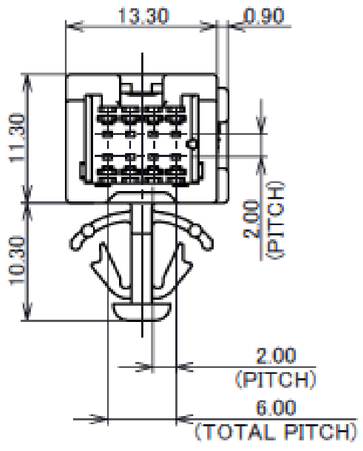

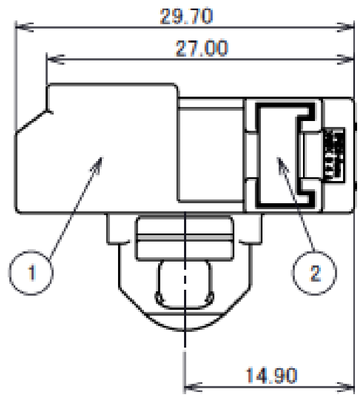

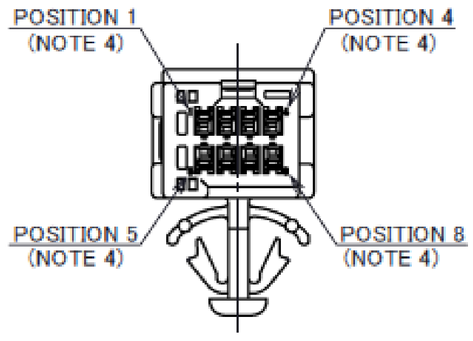

TABLE1. COUNTERPARTS FOR MATING

KEY CODING	MALE CONNECTOR		FEMALE CONNECTOR					
			FEMALE HOUSING		FEMALE RETAINER		FEMALE TERMINAL	
	PART NO.	COLOR	PART NO.	COLOR	PART NO.	COLOR	PART NO.	FINISH
KEY CODING-A	V0122-008B-01	MALE HOUSING:BLACK MALE RETAINER:BLACK	V0116-91008-02	BLACK	V0116-92008-01	BLACK	VT009-02	Sn REFLOW
KEY CODING-B	V0122-008B-11	MALE HOUSING:NATURAL MALE RETAINER:BLACK	V0116-91008-12	NATURAL				

NO.	DESCRIPTION	MATERIAL	FINISH/COLOR/REMARKS
2	MALE RETAINER	GLASS-FILLED PBT	BLACK
1	MALE HOUSING	PBT	BLACK、NATURAL

NOTES
1.APPLICABLE PART NO.:
·MALE TERMINAL･･･VT010-01
·FEMALE CONNECTOR･･･IT IS SHOWN IN TABLE 1.
2.COMPLY WITH ELV / RoHS.
3.HANDLE OF PRODUCT IN COMPLIANCE WITH HANDLING MANUAL【HDM-0022】
4.POSITION NUMBERS ARE INDICATED.

Rev.0

ISH® (Wire-to-Wire Type) FEMALE (SINGLE ROW):

PART NO.	LOCK TYPE	KEY CODING	COLOR	FOR REAR COVER
V0113-91003-01	NORMAL ROCK	-	BLACK	N/A

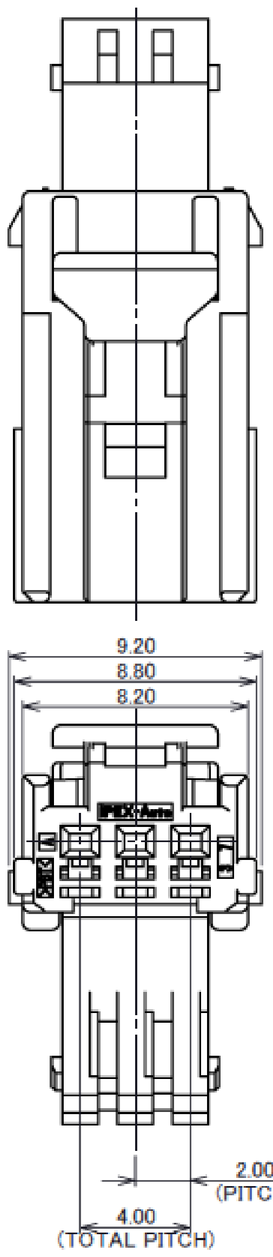

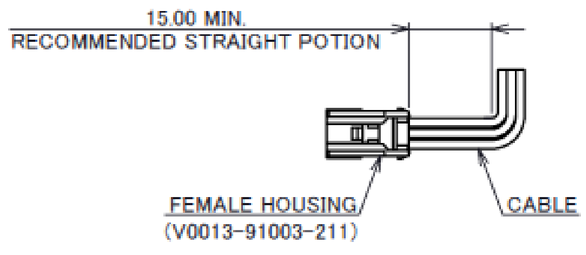

FEMALE CONNECTOR
1:1

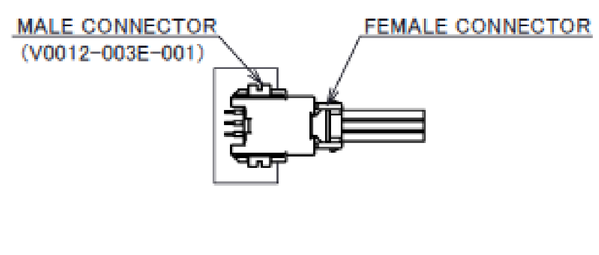

MATING STATE
1:1

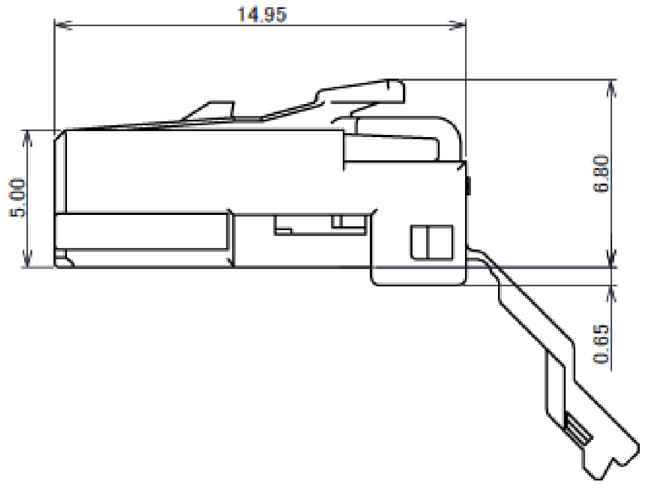

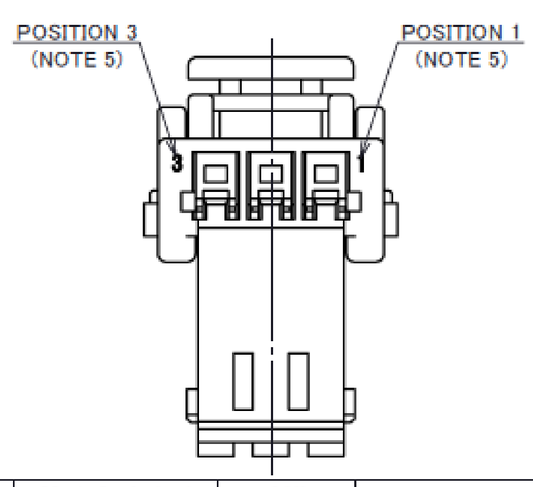

NO.	DESCRIPTION	MATERIAL	FINISH/COLOR/REMARKS
1	FEMALE HOUSING	PBT	BLACK

NOTES
1.APPLICABLE PART NO.:
·FEMALE TERMINAL --- VT009-02
·CABLE COVER --- V0113-93003-01
2.MATERIAL:PBT
3.COMPLY WITH ELV/RoHS.
4.HANDLE OF PRODUCT IN COMPLIANCE WITH HANDLING MANUAL【HDM-0020】
5.POSITION NUMBERS ARE INDICATED.

Rev.0

ISH® (Wire-to-Wire Type) FEMALE (DOUBLE ROWS):

PART NO.	LOCK TYPE	KEY CODING	COLOR	FOR REAR COVER
V0116-91008-02	INERTIA LOCK	KEY CODING-A	BLACK	N/A
V0116-91008-03				APPLICABLE
V0116-91008-12		KEY CODING-B	NATURAL	N/A
V0116-91008-22		KEY CODING-C	BLACK	
V0116-91008-32		KEY CODING-D	NATURAL	

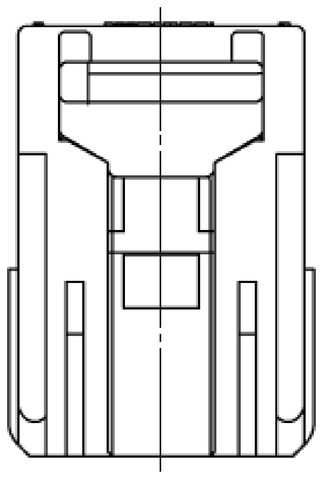

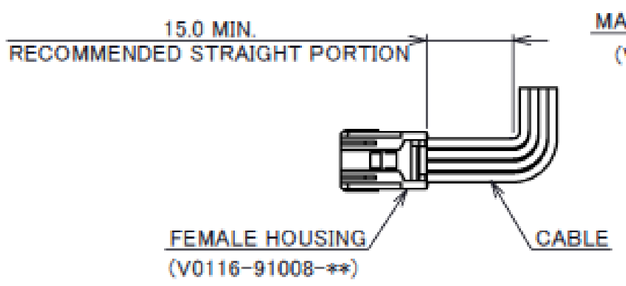

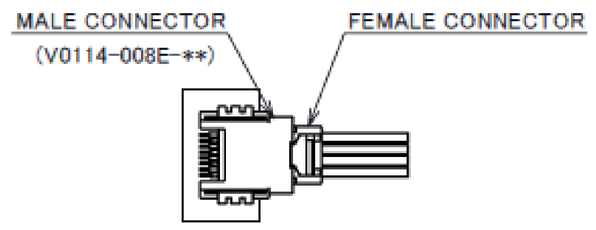

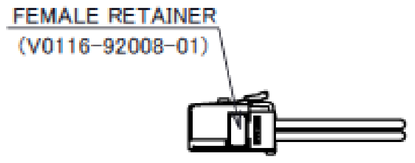

FEMALE CONNECTOR
1:1

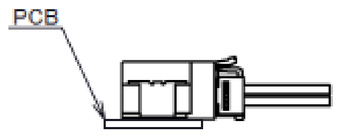

MATING STATE
1:1

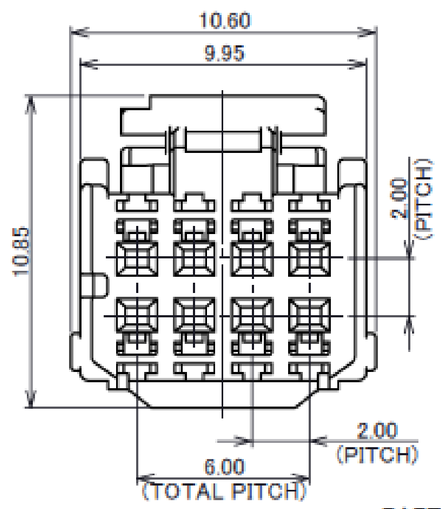

PART NO.:V0116-91008-02

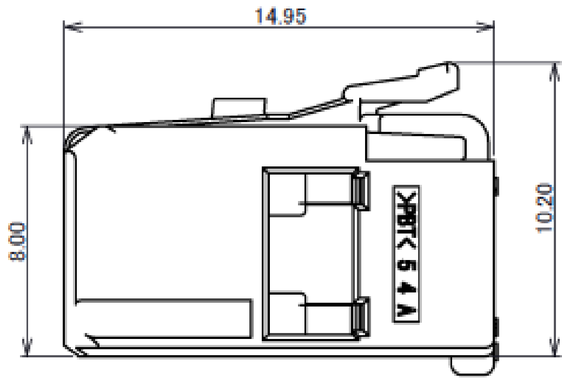

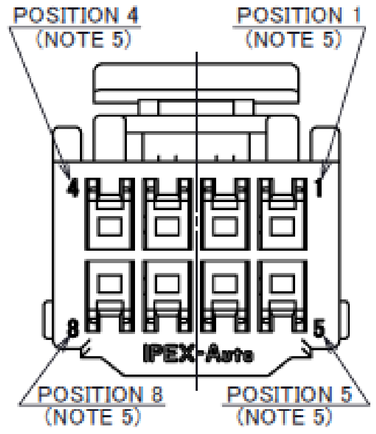

1	MALE HOUSING	PBT	BLACK、NATURAL
NO.	DESCRIPTION	MATERIAL	FINISH/COLOR/REMARKS

NOTES
1.APPLICABLE PART NO.:
-FEMALE TERMINAL --- VT009-02
-FEMALE RETAINER --- V0116-92008-01
-REAR COVER---V0116-94008-01
2.MATERIAL:PBT
3.COMPLY WITH ELV/RoHS.
4.HANDLE OF PRODUCT IN COMPLIANCE WITH HANDLING MANUAL【HDM-0020】
5.POSITION NUMBERS ARE INDICATED.

Rev.0

ISH® (Wire-to-Wire Type) FEMALE (DOUBLE ROWS):

PART NO.	LOCK TYPE	KEY CODING	COLOR	FOR REAR COVER
V0116-91008-02	INERTIA LOCK	KEY CODING-A	BLACK	N/A
V0116-91008-03				APPLICABLE
V0116-91008-12		KEY CODING-B	NATURAL	N/A
V0116-91008-22		KEY CODING-C	BLACK	
V0116-91008-32		KEY CODING-D	NATURAL	

PART No.:V0116-91008-02

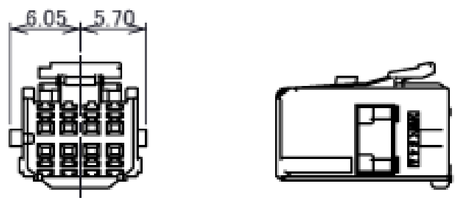

PART NO.:V0116-91008-03

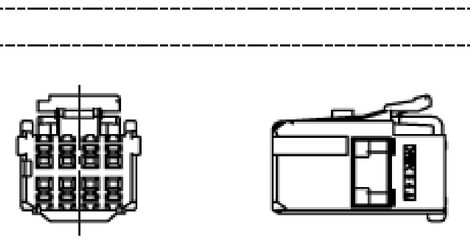

PART NO.:V0116-91008-11

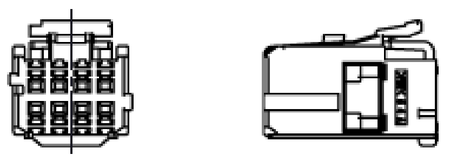

PART NO.:V0116-91008-21

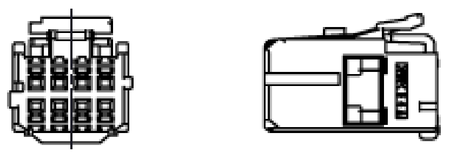

PART NO.:V0116-91008-31

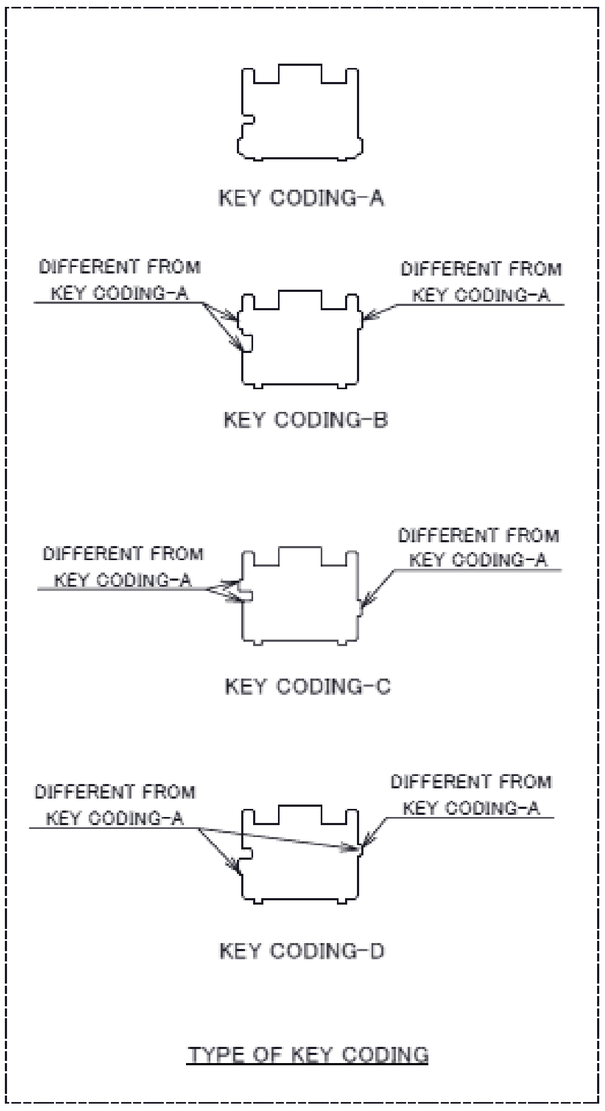

TYPE OF KEY CODING

Rev.0

ISH® (Wire-to-Wire Type) FEMALE RETAINER (DOUBLE ROWS):

PART NO.
V0116-92008-01

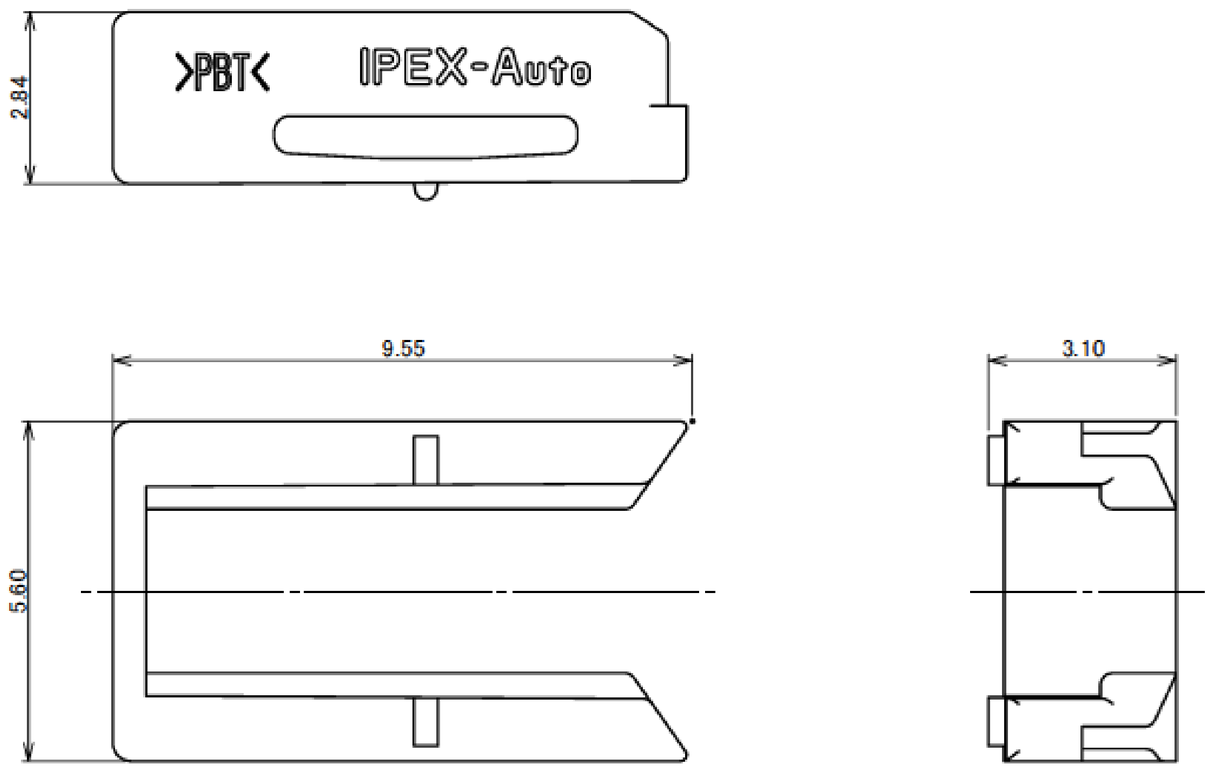

NOTES
1.APPLICABLE PART NO.:
・FEMALE HOUSING・・・V0116-91008-**
V0119-91008-01
2.MATERIAL:PBT
3.COMPLY WITH ELV/RoHS.
4.HANDLE OF PRODUCT IN COMPLIANCE WITH HANDLING MANUAL【HDM-0020】

1	FEMALE RETAINER	PBT	BLACK
NO.	DESCRIPTION	MATERIAL	FINISH/COLOR/REMARKS

Rev.0

ISH® (Wire-to-Wire Type) TERMINAL (for MALE):

PART NO.	PLATING
VT010-01	Sn REFLOW

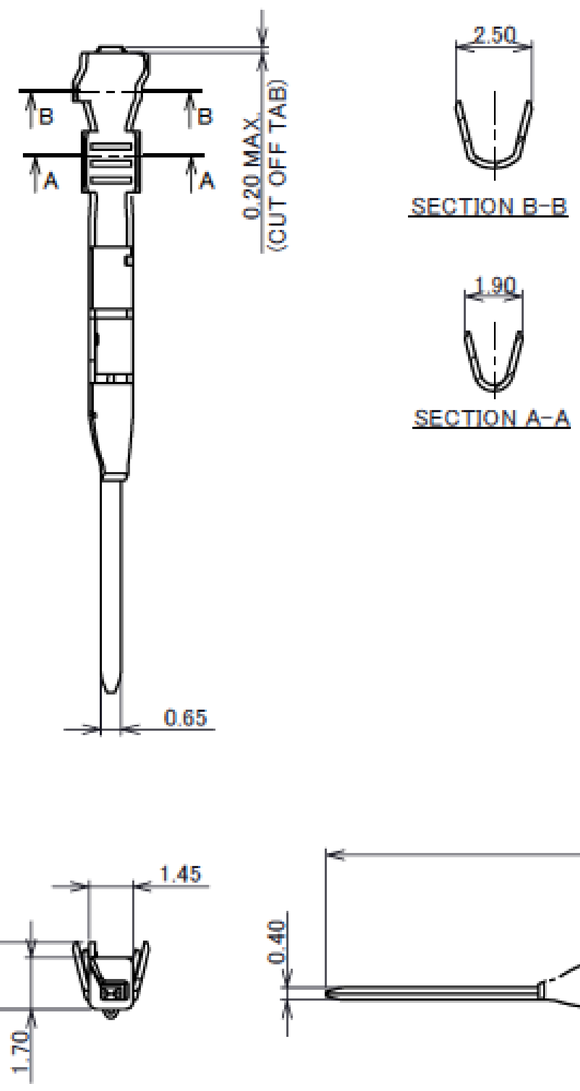

NOTES
1.APPLICABLE MALE HOUSING:ISH CONNECTOR SERIES
2.APPLICABLE CABLE SIZES:0.3mm² / 0.5mm² (FINISHED ϕ 1.60mm MAX.)
3.MATERIAL:BRASS
PLATING:Sn REFLOW
4.COMPLY WITH ELV/RoHS.
5.TERMINAL CRIMP SPECIFICATION MUST BE COMPLIANT WITH HANDLING MANUAL【HDM-0022】,【HDM-0024】

1	MALE TERMINAL	BRASS	PLATING:Sn REFLOW
NO.	DESCRIPTION	MATERIAL	FINISH/COLOR/REMARKS

Rev.0

ISH® (Wire-to-Wire Type) TERMINAL (for FEMALE):

PART NO.	PLATING
VT009-02	Sn REFLOW
VT009-03	CONTACT AREA : Au PLATING CRIMPING AREA : Sn REFLOW

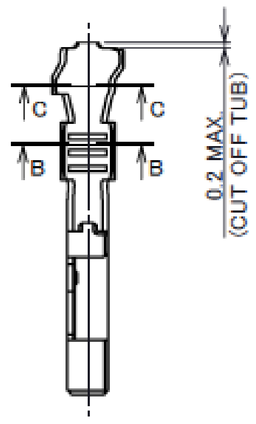

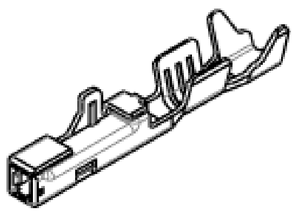

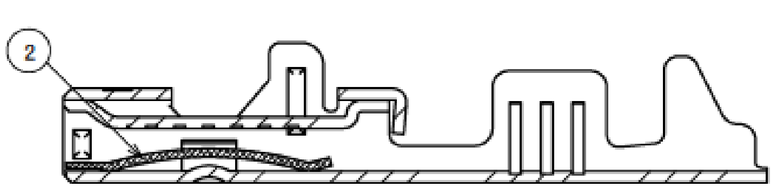

PART NO.: VT009-02

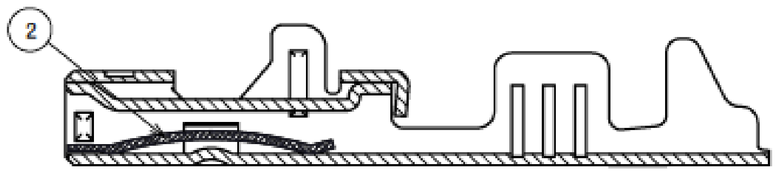

PART NO. : VT009-03

SECTION B-B

SECTION C-C

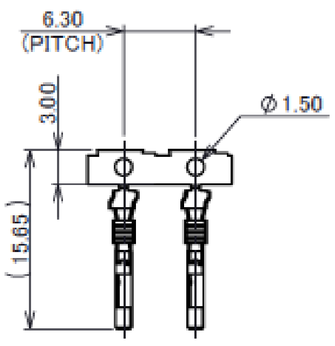

CARRIER
2 : 1

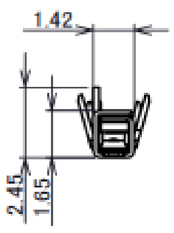

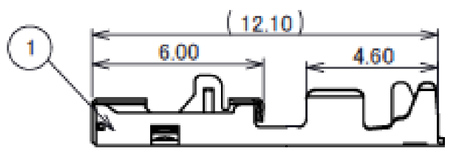

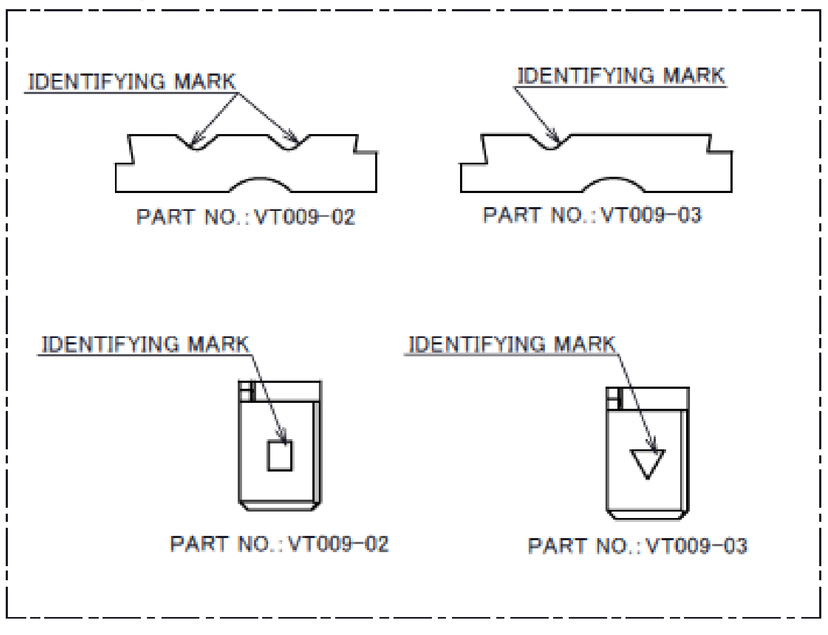

NOTE
1. APPLICABLE FEMALE HOUSING: ISH CONNECTOR SERIES
2. APPLICABLE CABLE SIZE: 0.3mm² / 0.5mm² (FINISHED ϕ 1.60mm MAX.)
3. COMPLY WITH ELV/RoHS.
4. TERMINAL CRIMP SPECIFICATION MUST BE COMPLIANT WITH HANDLING MANUAL【HDM-0020】.

NO.	DESCRIPTION	MATERIAL	FINISH/COLOR/REMARKS
2	SPRING	COPPER ALLOY	VT009-02 PLATING : Sn REFLOW VT009-03 PLATING : Au PLATING
1	BODY	BRASS	VT009-02 PLATING : Sn REFLOW VT009-03 PLATING CONTACT AREA : Au PLATING CRIMPING AREA : Sn REFLOW

Rev.0

Custom Connectors Available

RF Connector

MHF® series

Micro-coaxial/Twinax/ Discrete Wire Connector

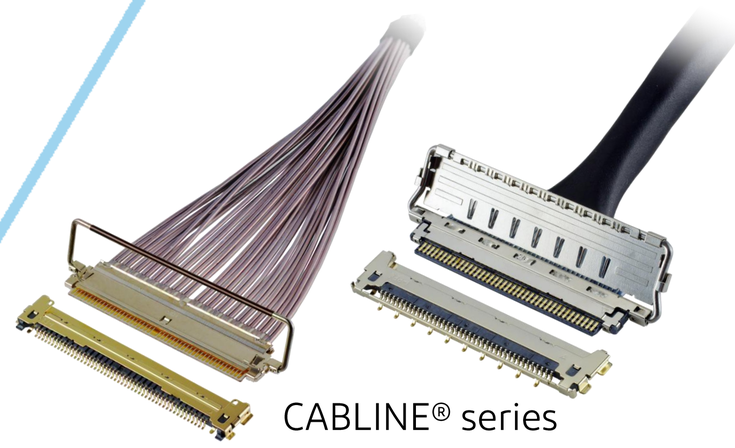

CABLINE® series

Optical Module

LIGHTPASS® series

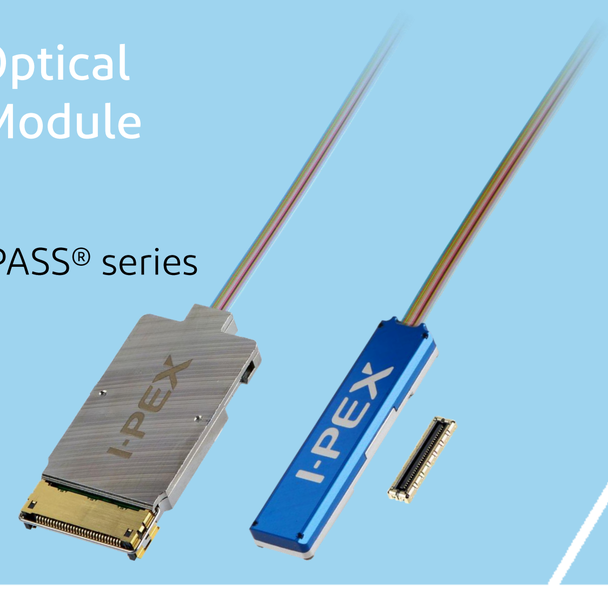

Board-to-Board Connector

NOVASTACK® series

Power Connector/ Terminal

AP series

ISH® series

FPC FFC Connector

MINIFLEX® series

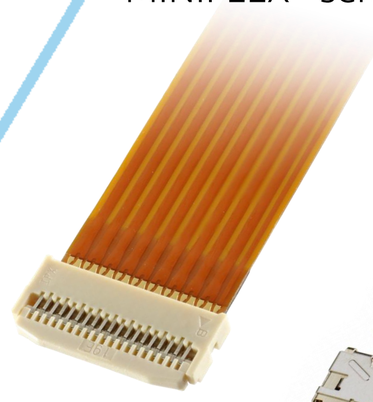

EVAFLEX® series

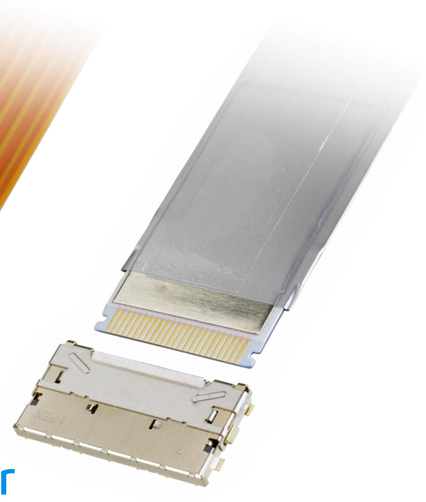

Inquiry

MINIDOCK® series

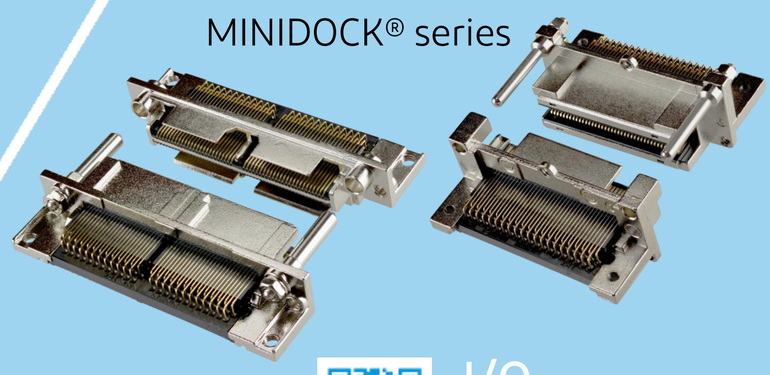

I/O Connector

I-PEX, MHF, CABLINE, LIGHTPASS, NOVASTACK, ISH, IARPB, MINIFLEX, EVAFLEX, MINIDOCKS and ZenShield are registered trademarks of I-PEX Inc. Please note that the contents in the catalog might be changed without prior notification. I-PEX Inc. assumes no responsibility for any inaccuracies or obligation to update Information on these documents. Please be sure to read and understand the latest "Precautions for Use" and "Instruction Manual" before you use our products. We shall not be responsible for any defects, damages or troubles in case you use our products without following the precautions for use. Please feel free to contact our sales representatives when you use our products for any applications that require very high reliability and safety, or that relate to human life (ex. nuclear power control, aerospace, transportation, medical equipment, safety equipment etc.).

Contact your sales representative or more detailed information.

www.i-pex.com

I-PEX

© I-PEX Inc. 2024
All rights reserved