PART NO.	Pos.	A	TEST BOARD No.	CONNECTOR P/N
91815-051B	51	22.5	TB-1496	20982-051E-01

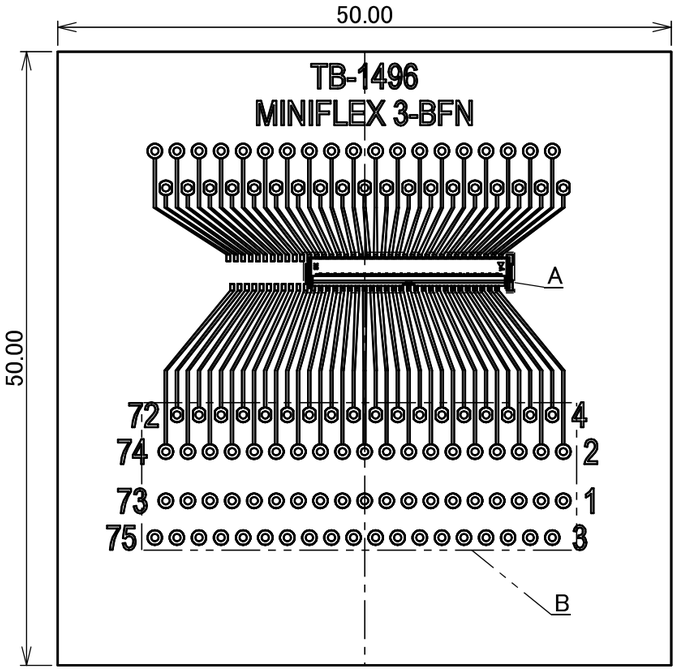

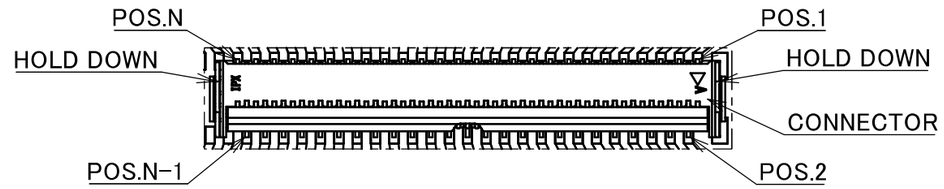

DETAIL A
(S= 5 : 1)

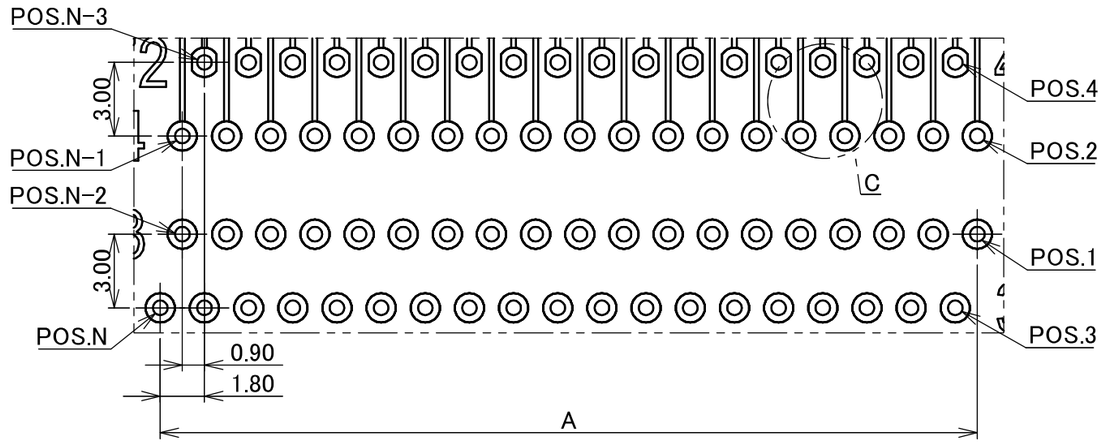

DETAIL B
(S= 4 : 1)

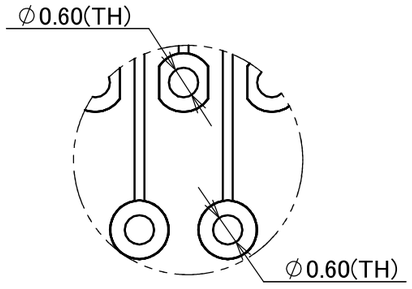

DETAIL C
(S= 8 : 1)

PIN ASSIGNMENT

CONNECTOR POS.	TEST POINT POS.
1	1
2	2
⋮	⋮
N-1	N-1
N	N

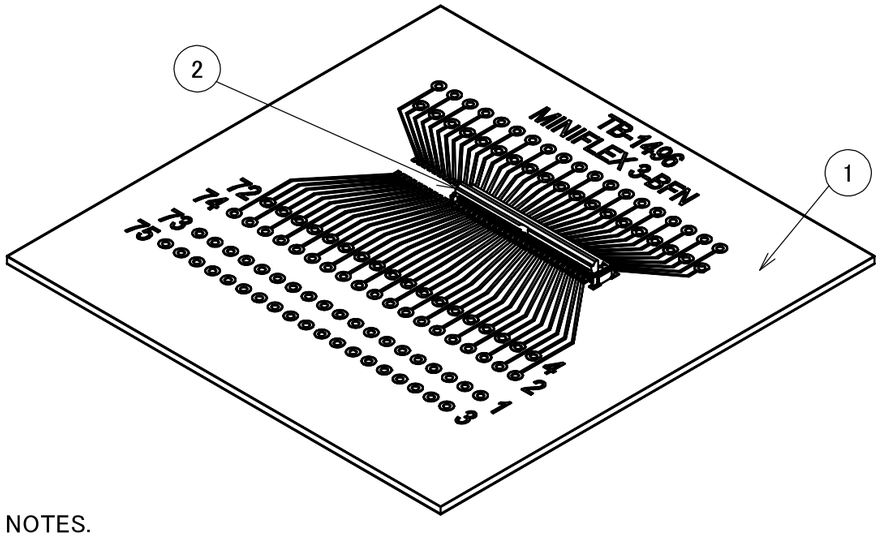

NOTES.
1.TEST BOARD MATERIAL : FR-4

NO.	DESCRIPTION	PART NO.	QTY	REMARKS
2	CONNECTOR	20982-***E-01	1	MINIFLEX 3-BFN L-HD
1	TEST BOARD	TB-1496	1	TEST BOARD THICKNESS: 0.80mm NUMBER OF LAYER : 2 BASE COPPER FOIL THICKNESS : 18 μm

REV.	ECN	BY	DATE	APP.
0	ZC01164	S.Tan	2026/11/10	–

REVISION RECORD

ANGLE	±2°	6 OVER 30 MAX.	±0.3
6 MAX.	±0.2	30 OVER 120 MAX.	±0.5

GENERAL TOLERANCE.

PROJECTION | SERIES No. R0 | CUSTOMER COPY

DWG. S.Tanaka DATE 2026/11/10
CHK. M.Muro
APP. H.Ikari

TITLE: MINIFLEX® 3-BFN L-HD CONTINUITY TEST BOARD ASSEMBLY

DWG. No. 91815

SCALE 2:1 | UNIT mm | SIZE A3 | SHEET 1/2 | REV. 0

I-PEX

PART NO.	Pos.	TEST BOARD No.	CONNECTOR P/N
91815-051B	51	TB-1496	20982-051E-01

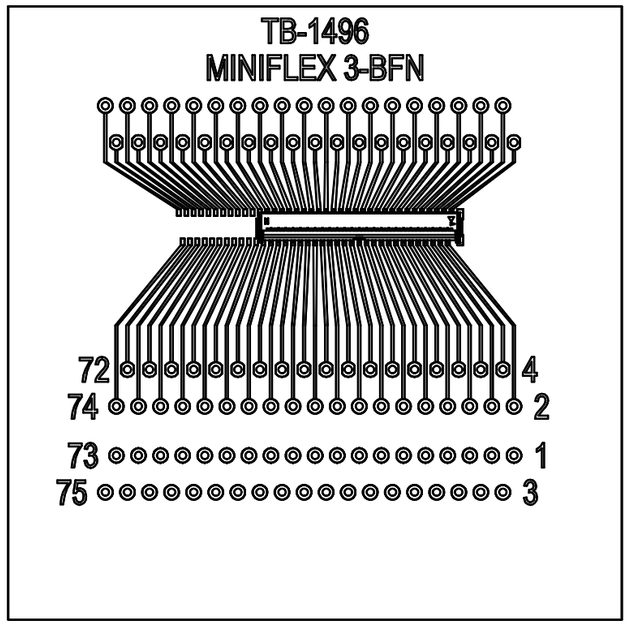

51P SHAPE

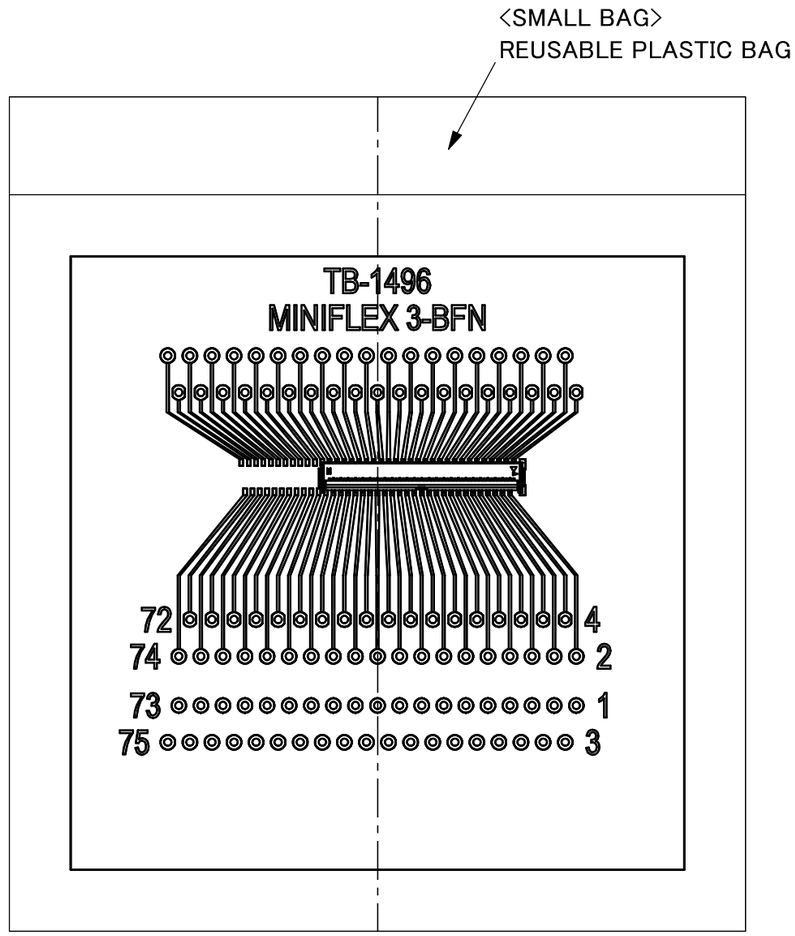

PACKING STYLE

ANGLE	±2°	6 OVER 30 MAX.	±0.3	PROJECTION	SERIES No.	CUSTOMER COPY	
6 MAX.	±0.2	30 OVER 120 MAX.	±0.5		R0		
GENERAL TOLERANCE.				TITLE		SCALE	
DWG.		DATE		MINIFLEX® 3-BFN L-HD CONTINUITY TEST BOARD ASSEMBLY		2:1	I-PEX
CHK.						UNIT mm	
APP.				DWG. No. 91815		SIZE A3	SHEET 2/2	REV. 0