PART No.
82682-100B-01-D

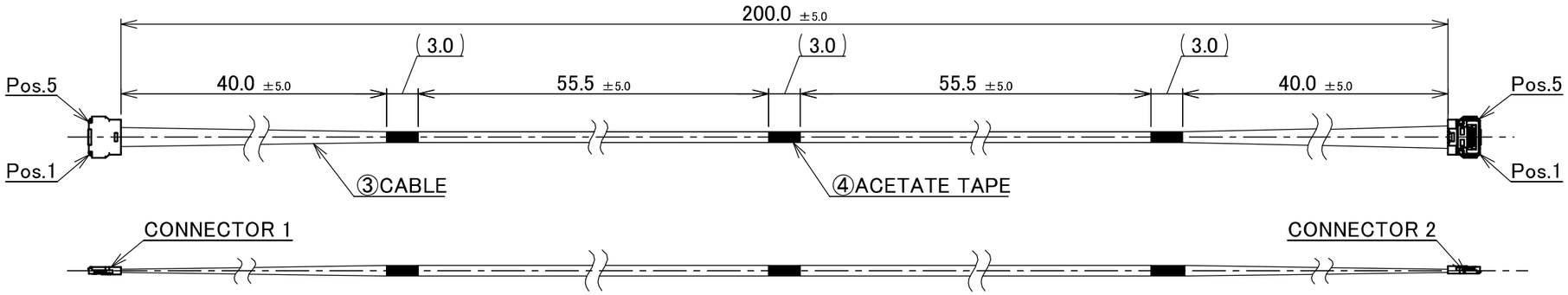

CONNECTOR 1&2
(S=10/1)

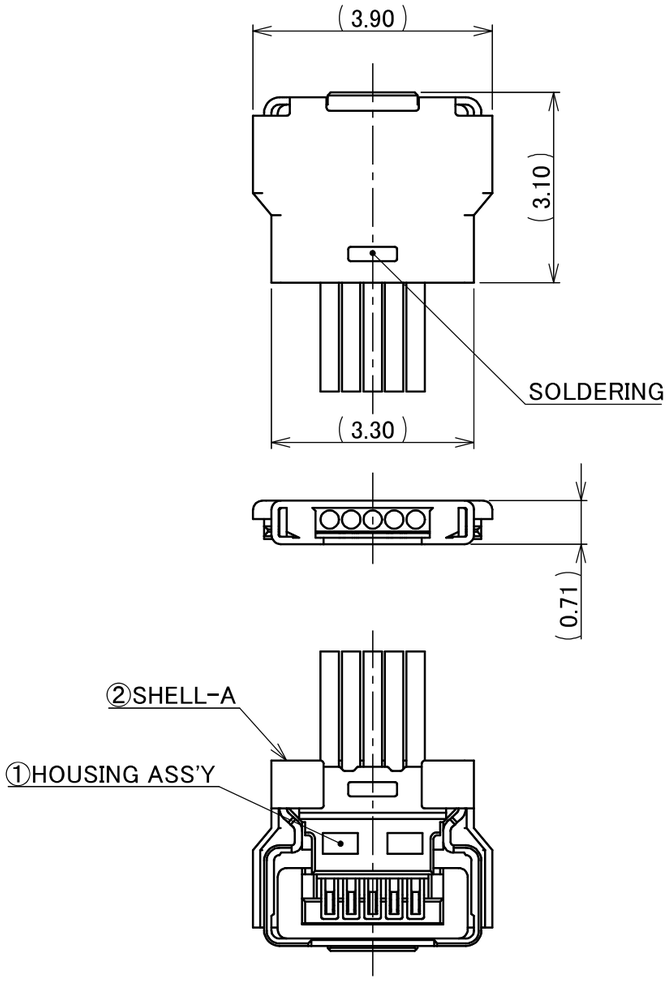

PIN ASSIGNMENT		
CONNECTOR 1	CABLE	CONNECTOR 2
5	MICRO-COAXIAL CABLE AWG#42 50 OHM, BLUE	5
4	MICRO-COAXIAL CABLE AWG#42 50 OHM, BLUE	4
3	MICRO-COAXIAL CABLE AWG#42 50 OHM, BLUE	3
2	MICRO-COAXIAL CABLE AWG#42 50 OHM, BLUE	2
1	MICRO-COAXIAL CABLE AWG#42 50 OHM, BLUE	1

NOTE.
1. TO HANDLE THIS CONNECTOR
   YOU MUST READ AND FOLLOW THE INSTRUCTION MANUAL BELOW.
   I-PEX INSTRUCTION MANUAL No.HIM-18037.
2. ELECTRIC CHARACTERICTICS
   WITHSTANDVOLTAGE : AC 200V LEAKAGE CURRENT 2.0mA MAX.
   INSULATION RESISTANCE : 50MΩ MIN. DC 100V
3. THE OPERATING TEMPERATURE OF THE HARNESS : 80℃ MAX.
4. RATING VOLTAGE : 30V

NO.	DESCRIPTION	PARTS NO.	QTY	REMARKS
4	ACETATE TAPE	-	3	BLACK
3	CABLE	-	5	MICRO-COAXIAL CABLE AWG#42 50 OHM, BLUE
2	SHELL-A	3568-0051	2	CONNECTOR 1&2 CABLINE®-UY PLUG P/N : 20857-005T-01 CONNECTOR TO BE MATED : 20854-005E-02
1	HOUSING ASS'Y	20907-005E-01	2	

REV.	ECN	BY	DATE	APP.
1	ZM00470	K.B	Jan./13/'26	T.M
0	ZM00409	K.Fu	Dec./18/'25	-

REVISION RECORD

ANGLE	±2°	6 OVER 30 MAX.	±0.3
6 MAX.	±0.2	30 OVER 120 MAX.	±0.5

GENERAL TOLERANCE.

PROJECTION

SERIES No. IH-200016

CUSTOMER COPY

DWG. K.Fukutomi DATE 2025/12/18

CHK. R.Takei

APP. H.Ikari

TITLE CABLINE®-UY 5P HARNESS

DWG. No. 82682

SCALE 2:1

UNIT mm

SIZE A3 SHEET 1/1 REV. 1

I-PEX

Confidential C

I-PEX Inc.

QKE-DFFDE06-02 REV.12