PART No.
82449-100B-02-D

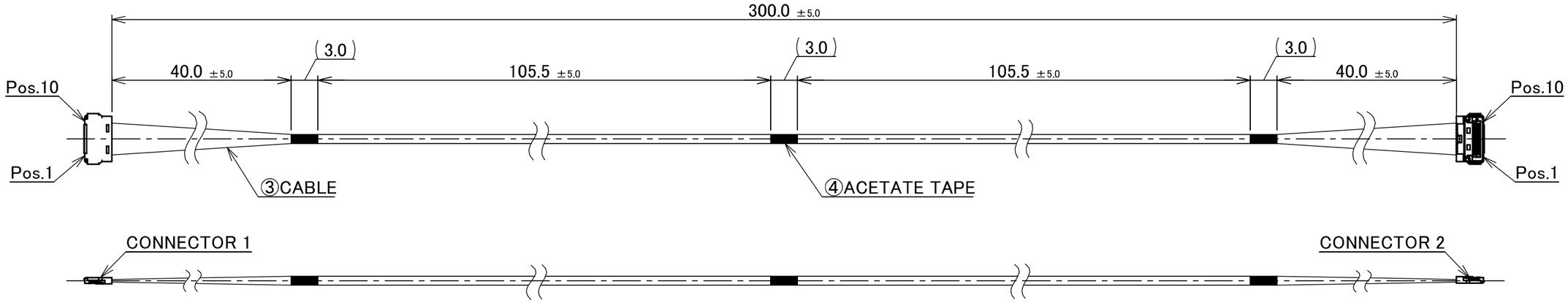

CONNECTOR 1&2
(S=10/1)

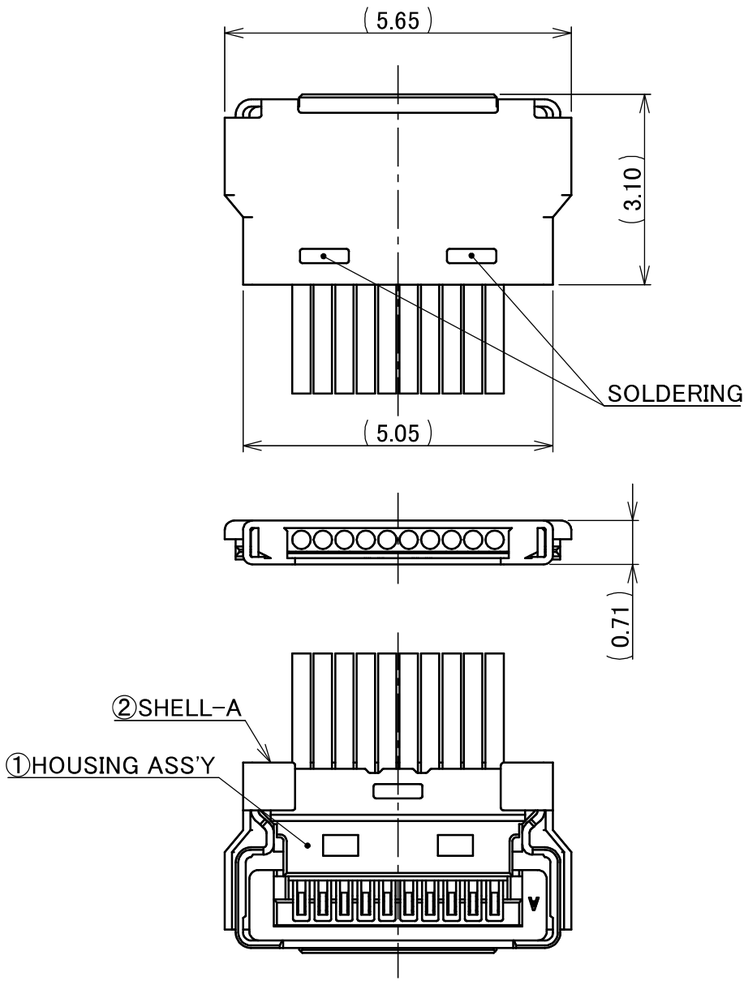

PIN ASSIGNMENT		
CONNECTOR 1	CABLE	CONNECTOR 2
10	MICRO-COAXIAL CABLE AWG#42 50 OHM, BLUE	10
9	MICRO-COAXIAL CABLE AWG#42 50 OHM, BLUE	9
⋮	MICRO-COAXIAL CABLE AWG#42 50 OHM, BLUE	⋮
2	MICRO-COAXIAL CABLE AWG#42 50 OHM, BLUE	2
1	MICRO-COAXIAL CABLE AWG#42 50 OHM, BLUE	1

NOTE.
1. TO HANDLE THIS CONNECTOR
   YOU MUST READ AND FOLLOW THE INSTRUCTION MANUAL BELOW.
   I-PEX INSTRUCTION MANUAL No.HIM-18037.
2. ELECTRIC CHARACTERICTICS
   WITHSTANDVOLTAGE : AC 200V LEAKAGE CURRENT 2.0mA MAX.
   INSULATION RESISTANCE : 50MΩ MIN. DC 100V
3. THE OPERATING TEMPERATURE OF THE HARNESS : 80℃ MAX.
4. RATING VOLTAGE : 30V

NO.	DESCRIPTION	PARTS NO.	QTY	REMARKS
4	ACETATE TAPE	-	3	BLACK
3	CABLE	-	10	MICRO-COAXIAL CABLE AWG#42 50 OHM, BLUE
2	SHELL-A	3568-0101	2	CONNECTOR 1&2 CABLINE®-UY PLUG P/N : 20857-010T-01 CONNECTOR TO BE MATED : 20854-010E-02
1	HOUSING ASS'Y	20907-010E-01	2	

REV.	ECN	BY	DATE	APP.
0	Z250810	K.B	May/23/'25	-

REVISION RECORD

GENERAL TOLERANCE.			
ANGLE	±2°	6 OVER 30 MAX.	±0.3
6 MAX.	±0.2	30 OVER 120 MAX.	±0.5

PROJECTION

SERIES No. IH-200016

CUSTOMER COPY

DWG. K.Baba DATE 2025/05/23

CHK. R.Takei

APP. H.Ikari

TITLE CABLINE®-UY 10P HARNESS

DWG. No. 82449

SCALE 2:1 UNIT mm SIZE A3 SHEET 1/1 REV. 0

I-PEX

Confidential C

I-PEX Inc.

QKE-DFFDE06-02 REV.12