PART No.
82677-100B-01-D

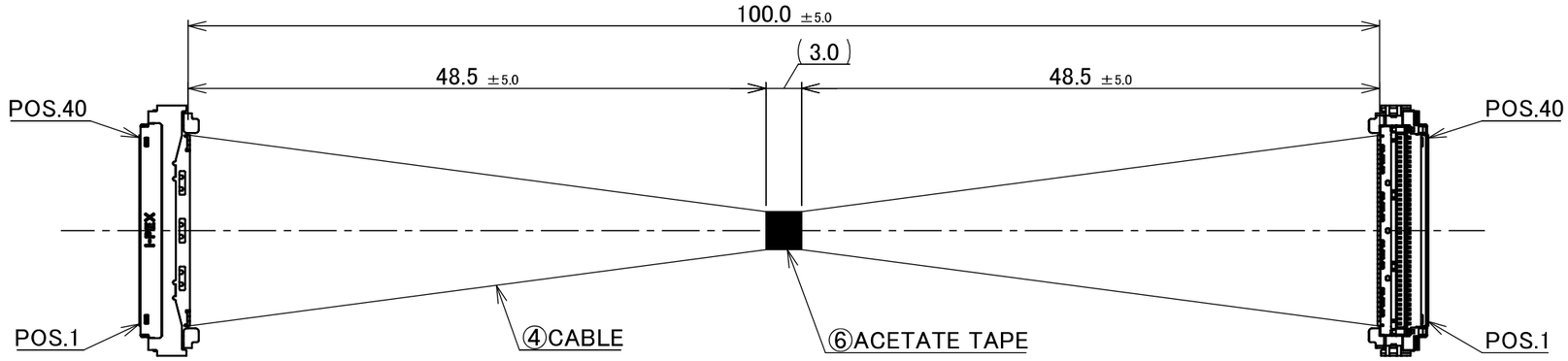

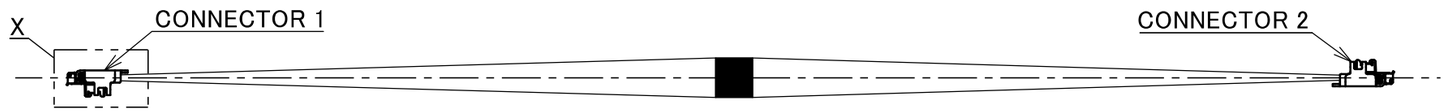

CONNECTOR 1&2
(S=5/1)

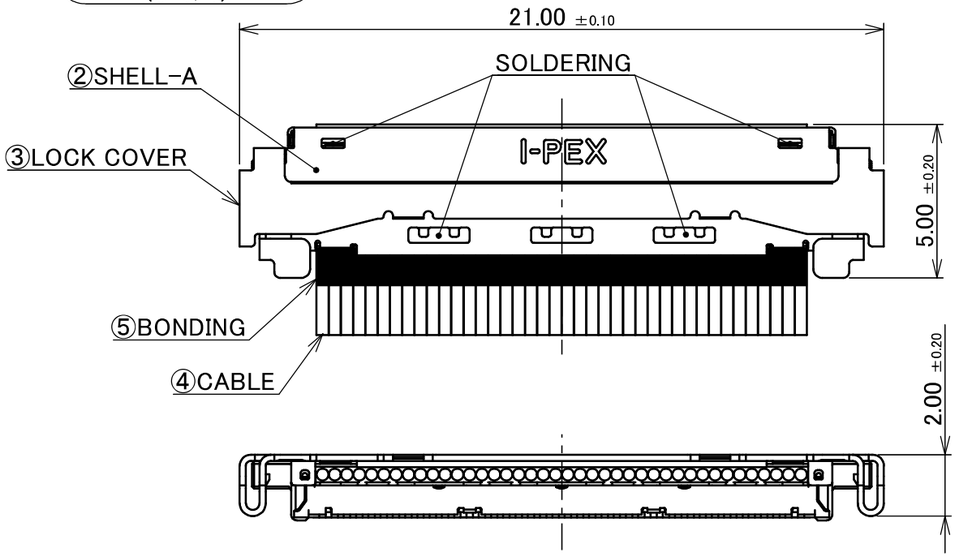

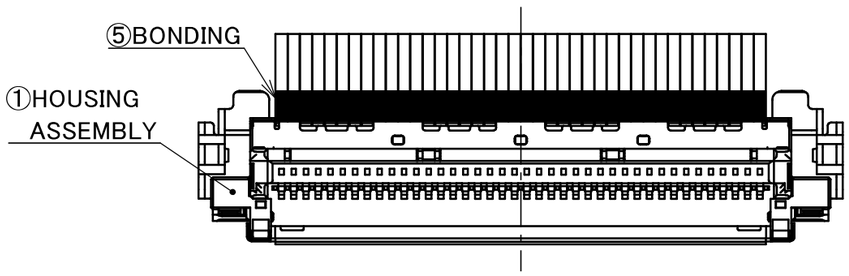

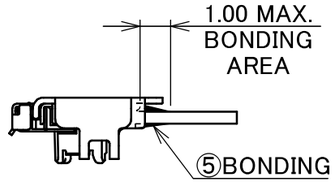

DETAIL X
(S=5/1)

PIN ASSIGNMENT		
CONNECTOR 1	CABLE	CONNECTOR 2
40	MICRO-COAXIAL CABLE AWG#40 50 OHM, BLUE	40
39	MICRO-COAXIAL CABLE AWG#40 50 OHM, BLUE	39
⋮	MICRO-COAXIAL CABLE AWG#40 50 OHM, BLUE	⋮
2	MICRO-COAXIAL CABLE AWG#40 50 OHM, BLUE	2
1	MICRO-COAXIAL CABLE AWG#40 50 OHM, BLUE	1

NOTE.
1.TO HANDLE THIS CONNECTOR
YOU MUST READ AND FOLLOW THE INSTRUCTION MANUAL BELOW.
I-PEX INSTRUCTION MANUAL No.HIM-18033.
2. ELECTRIC CHARACTERICTICS
WITHSTANDVOLTAGE : AC 250V LEAKAGE CURRENT 2.0mA MAX.
INSULATION RESISTANCE : 50MΩ MIN. DC 100V
3. THE OPERATING TEMPERATURE OF THE HARNESS : 80℃ MAX.
4. RATING VOLTAGE 30V

NO.	DESCRIPTION	PARTS NO.	QTY	REMARKS
6	ACETATE TAPE	–	1	BLACK
5	BONDING	–	–	UV GLUE
4	CABLE	–	40	MICRO-COAXIAL CABLE AWG#40 50 OHM, BLUE
3	LOCK COVER	3493-0401	2	CONNECTOR 1&2
2	SHELL-A	3488-0401	2	CABLINE®-UM PLUG P/N : 20877-040T-01
1	HOUSING ASSEMBLY	20878-040T-01	2	CONNECTOR TO BE MATED : 20879-040E-01

REV.	ECN	BY	DATE	APP.
0	ZM00401	K.Fu	Dec./16/'25	–

REVISION RECORD

ANGLE	±2°	6 OVER 30 MAX.	±0.3
6 MAX.	±0.2	30 OVER 120 MAX.	±0.5

GENERAL TOLERANCE.

PROJECTION

SERIES No. IH-200016

CUSTOMER COPY

DWG. K.Fukutomi DATE 2025/12/16

CHK. R.Takei

APP. H.Ikari

TITLE CABLINE®-UM 40P HARNESS

DWG. No. 82677

SCALE 2:1

UNIT mm

SIZE A3

SHEET 1/1

REV. 0

I-PEX

Confidential C

I-PEX Inc.

QKE-DFFDE06-02 REV.12