| PART No. |
|---|
| 82674-100B-01-D |

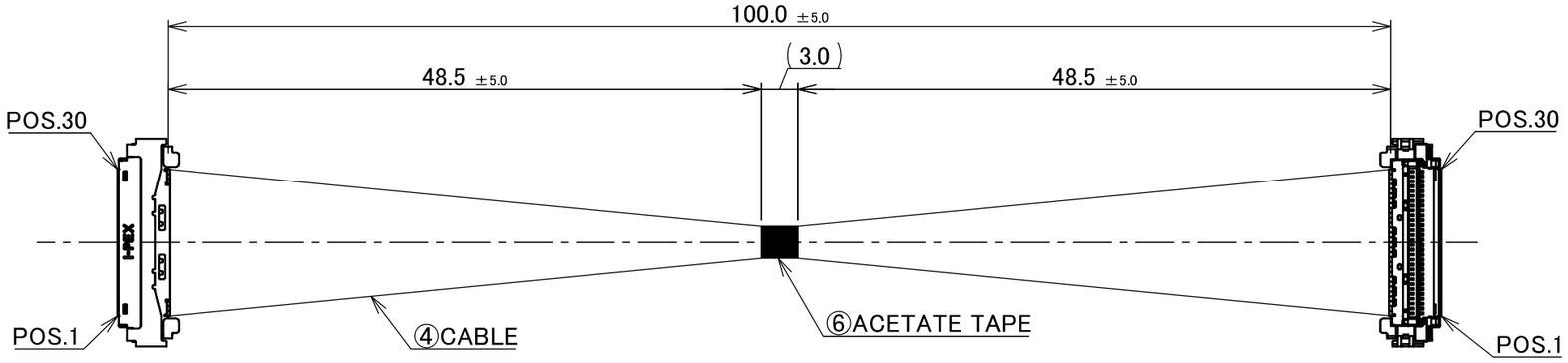


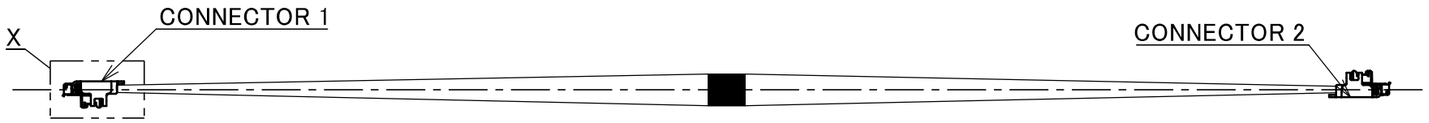


CONNECTOR 1&2
(S=5/1)

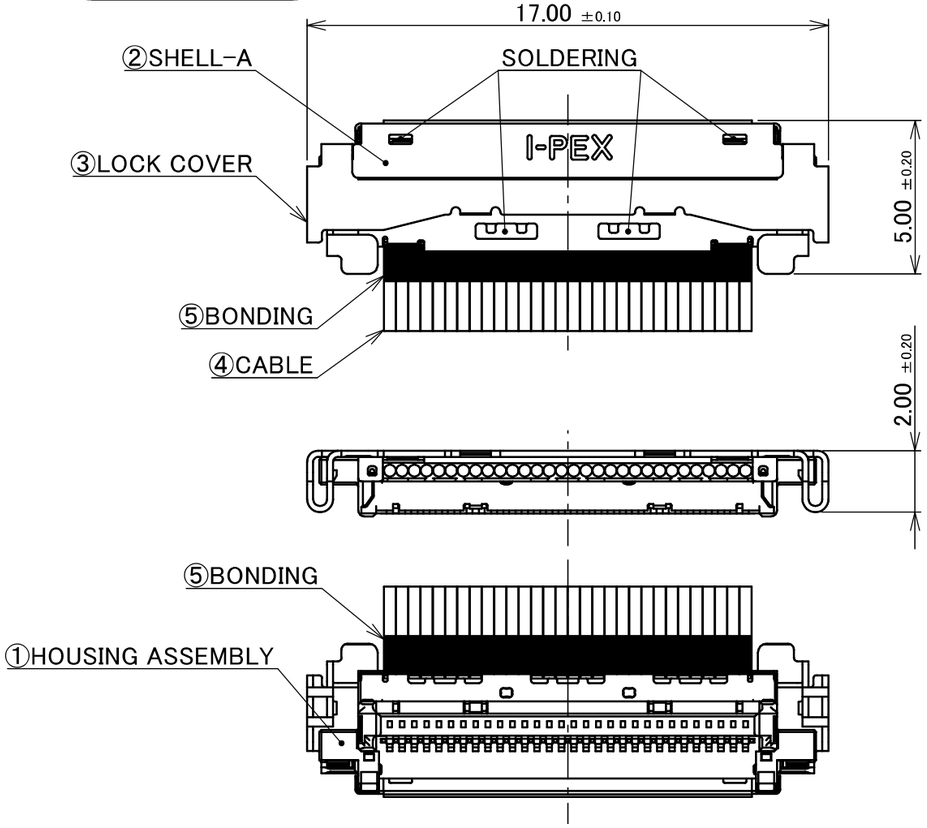


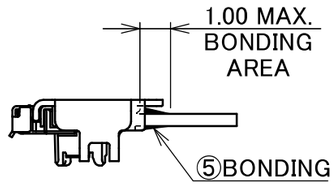


DETAIL X
(S=5/1)

NOTE.
1.TO HANDLE THIS CONNECTOR
YOU MUST READ AND FOLLOW THE INSTRUCTION MANUAL BELOW.
I-PEX INSTRUCTION MANUAL No.HIM-18033.
2. ELECTRIC CHARACTERICTICS
WITHSTANDVOLTAGE : AC 250V LEAKAGE CURRENT 2.0mA MAX.
INSULATION RESISTANCE : 50MΩ MIN. DC 100V
3. THE OPERATING TEMPERATURE OF THE HARNESS : 80℃ MAX.
4. RATING VOLTAGE : 30V

| PIN ASSIGNMENT | | |
|---|---|---|
| CONNECTOR 1 | CABLE | CONNECTOR 2 |
| 30 | MICRO-COAXIAL CABLE AWG#40 50 OHM, BLUE | 30 |
| 29 | MICRO-COAXIAL CABLE AWG#40 50 OHM, BLUE | 29 |
| ⋮ | MICRO-COAXIAL CABLE AWG#40 50 OHM, BLUE | ⋮ |
| 2 | MICRO-COAXIAL CABLE AWG#40 50 OHM, BLUE | 2 |
| 1 | MICRO-COAXIAL CABLE AWG#40 50 OHM, BLUE | 1 |

| NO. | DESCRIPTION | PARTS NO. | QTY | REMARKS |
|---|---|---|---|---|
| 6 | ACETATE TAPE | - | 1 | BLACK |
| 5 | BONDING | - | - | UV GLUE |
| 4 | CABLE | - | 30 | MICRO-COAXIAL CABLE AWG#40 50 OHM, BLUE |
| 3 | LOCK COVER | 3493-0301 | 2 | CONNECTOR 1&2 |
| 2 | SHELL-A | 3488-0301 | 2 | CABLINE®-UM PLUG P/N : 20877-030T-01 |
| 1 | HOUSING ASSEMBLY | 20878-030T-01 | 2 | CONNECTOR TO BE MATED : 20879-030E-01 |

| REV. | ECN | BY | DATE | APP. |
|---|---|---|---|---|
| 0 | ZM00401 | K.Fu | Dec./16/'25 | - |

REVISION RECORD

| | | | |
|---|---|---|---|
| ANGLE | ±2° | 6 OVER 30 MAX. | ±0.3 |
| 6 MAX. | ±0.2 | 30 OVER 120 MAX. | ±0.5 |

GENERAL TOLERANCE.

PROJECTION

SERIES No. IH-200016

CUSTOMER COPY

DWG. K.Fukutomi DATE 2025/12/16

CHK. R.Takei

APP. H.Ikari

TITLE CABLINE®-UM 30P HARNESS

DWG. No. 82674

SCALE 2:1

UNIT mm

SIZE A3

SHEET 1/1

REV. 0

I-PEX

Confidential C

I-PEX Inc.

QKE-DFFDE06-02 REV.12