PART NO.
82440-100B-02-D

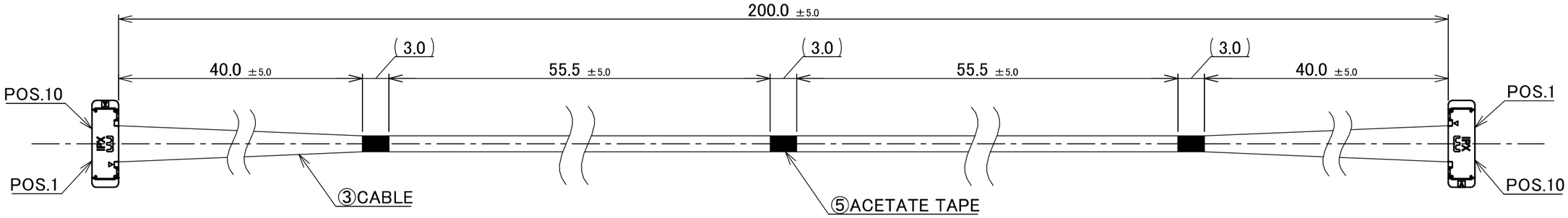

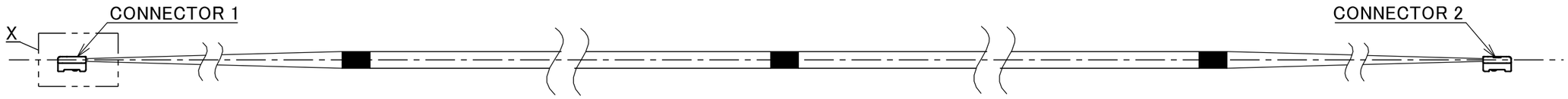

PIN ASSIGNMENT		
CONNECTOR 1	CABLE	CONNECTOR 2
10	MICRO-COAXIAL CABLE AWG#40 50 OHM, BLUE	1
9	MICRO-COAXIAL CABLE AWG#40 50 OHM, BLUE	2
⋮	MICRO-COAXIAL CABLE AWG#40 50 OHM, BLUE	⋮
2	MICRO-COAXIAL CABLE AWG#40 50 OHM, BLUE	9
1	MICRO-COAXIAL CABLE AWG#40 50 OHM, BLUE	10

CONNECTOR 1&2
(S=5/1)

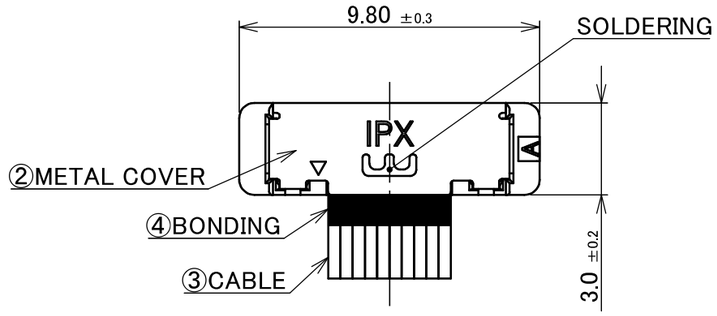

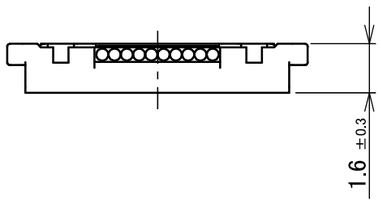

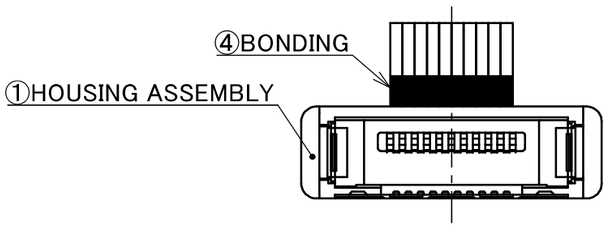

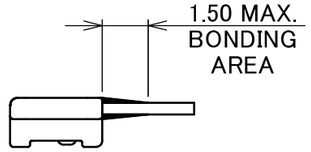

DETAIL X
(S=5/1)

NOTE.
1.TO HANDLE THIS CONNECTOR
YOU MUST READ AND FOLLOW THE INSTRUCTION MANUAL BELOW.
I-PEX INSTRUCTION MANUAL No.HIM-04001.
2. ELECTRIC CHARACTERICTICS
WITHSTANDVOLTAGE : AC 250V LEAKAGE CURRENT 2.0mA MAX.
INSULATION RESISTANCE : 50MΩ MIN. DC 100V
3. THE OPERATING TEMPERATURE OF THE HARNESS : 80℃ MAX.
4. RATING VOLTAGE : 30V

NO.	DESCRIPTION	PARTS NO.	QTY	REMARKS
5	ACETATE TAPE	–	3	BLACK
4	BONDING	–	–	UV GLUE
3	CABLE	–	10	MICRO-COAXIAL CABLE AWG #40, 50 OHM, BLUE
2	METAL COVER	2182-010-03	2	CONNECTOR 1&2 CABLINE®-SS PLUG P/N : 20380-R10T-06 CONNECTOR TO BE MATED : 20374-R10E-31
1	HOUSING ASSEMBLY	20373-R10T-06	2	

REV.	ECN	BY	DATE	APP.
0	Z250808	K.B	May/22/'25	–

REVISION RECORD

ANGLE	±2°	6 OVER 30 MAX.	±0.3
6 MAX.	±0.2	30 OVER 120 MAX.	±0.5

GENERAL TOLERANCE.

PROJECTION

SERIES No. IH-200016

CUSTOMER COPY

DWG. K.Baba DATE 2025/05/22

CHK. R.Takei

APP. H.Ikari

TITLE CABLINE®-SS 10P HARNESS

DWG. No. 82440

SCALE 2:1

UNIT mm

SIZE A3 SHEET 1/1 REV. 0

I-PEX

Confidential C

I-PEX Inc.

QKE-DFFDE06-02 REV.12