PART No.
82670-100B-01-D

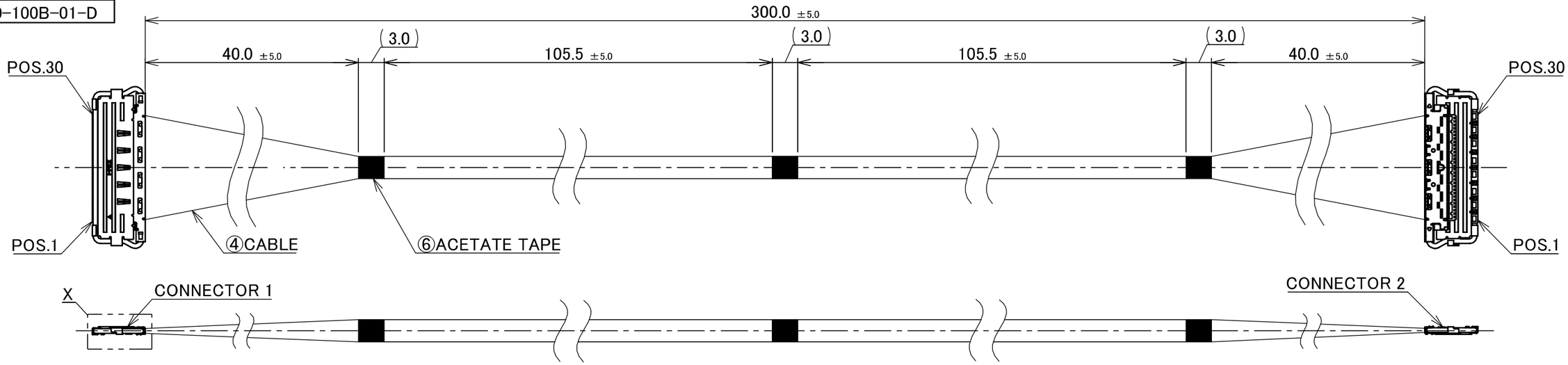

CONNECTOR 1&2
(S=5/1)

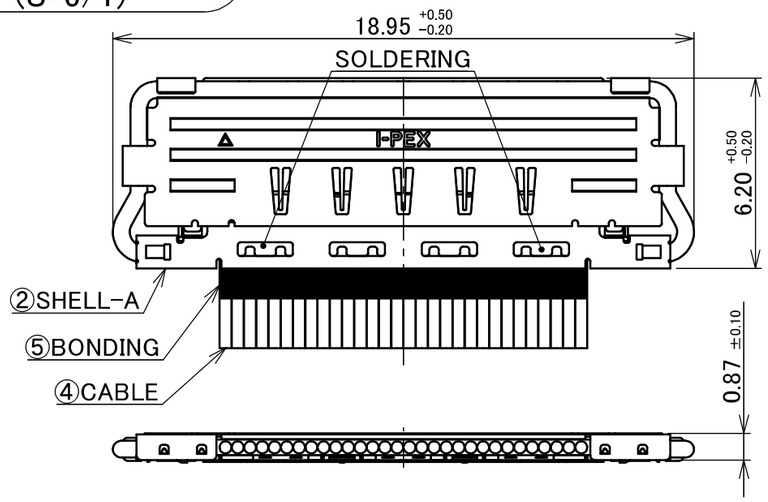

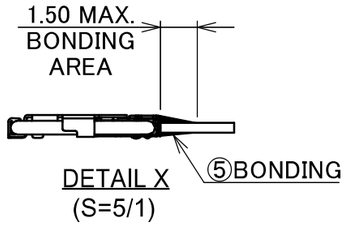

DETAIL X
(S=5/1)

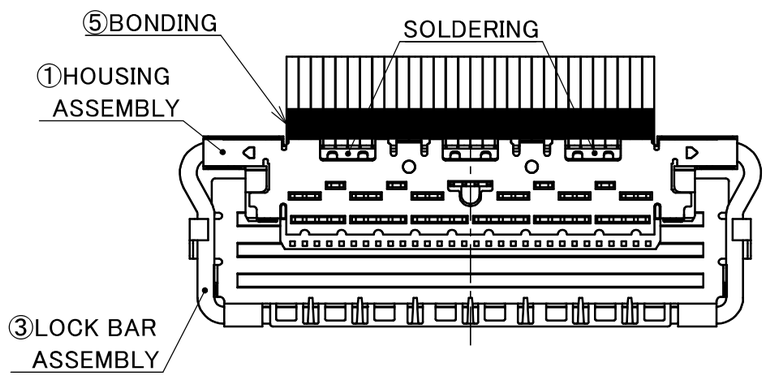

NOTE.
1. TO HANDLE THIS CONNECTOR
   YOU MUST READ AND FOLLOW THE INSTRUCTION MANUAL BELOW.
   I-PEX INSTRUCTION MANUAL No.HIM-15033.
2. ELECTRIC CHARACTERICTICS
   WITHSTANDVOLTAGE : AC 250V LEAKAGE CURRENT 2.0mA MAX.
   INSULATION RESISTANCE : 50MΩ MIN. DC 100V
3. THE OPERATING TEMPERATURE OF THE HARNESS : 80℃ MAX.
4. RATING VOLTAGE : 30V

PIN ASSIGNMENT		
CONNECTOR 1	CABLE	CONNECTOR 2
30	MICRO-COAXIAL CABLE AWG#40 50 OHM, BLUE	30
29	MICRO-COAXIAL CABLE AWG#40 50 OHM, BLUE	29
⋮	MICRO-COAXIAL CABLE AWG#40 50 OHM, BLUE	⋮
2	MICRO-COAXIAL CABLE AWG#40 50 OHM, BLUE	2
1	MICRO-COAXIAL CABLE AWG#40 50 OHM, BLUE	1

NO.	DESCRIPTION	PARTS NO.	QTY	REMARK
6	ACETATE TAPE	–	3	BLACK
5	BONDING	–	–	UV GLUE
4	CABLE	–	30	MICRO-COAXIAL CABLE AWG#40 50 OHM, BLUE
3	LOCK BAR ASSEMBLY	20681-030T-01	2	CONNECTOR 1&2
2	SHELL-A	3204-0301	2	CABLINE-CA II PLUG P/N : 20679-030T-01
1	HOUSING ASSEMBLY	20680-030T-01	2	CONNECTOR TO BE MATED : 20682-030E-02

REV.	ECN	BY	DATE	APP.
1	ZM01103	K.B	2026/07/23	T.M
0	ZM00400	K.Fu	2025/12/16	–

REVISION RECORD

GENERAL TOLERANCE.			
ANGLE	±2°	6 OVER 30 MAX.	±0.3
6 MAX.	±0.2	30 OVER 120 MAX.	±0.5

PROJECTION

SERIES No. IH-200016

CUSTOMER COPY

DWG. K.Fukutomi DATE 2025/12/16

CHK. R.Takei

APP. H.Ikari

TITLE CABLINE®-CA II 30P HARNESS

DWG. No. 82670

SCALE 2:1 UNIT mm SIZE A3 SHEET 1/1 REV. 1

I-PEX

Confidential C

I-PEX Inc.

QKE-DFFDE06-02 REV.12