PART No.
82434-100B-02-D

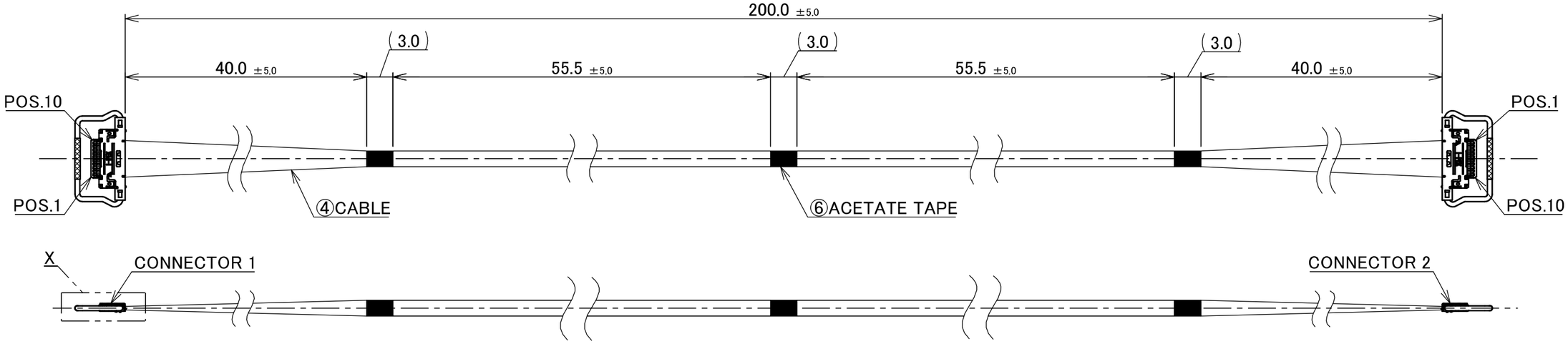

CONNECTOR 1&2 (S=5/1)

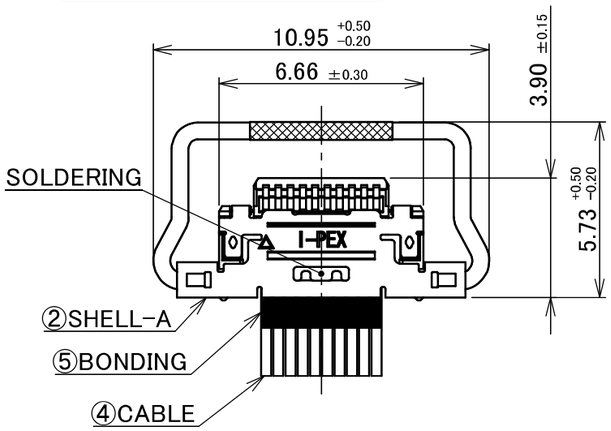

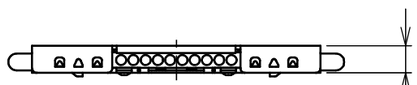

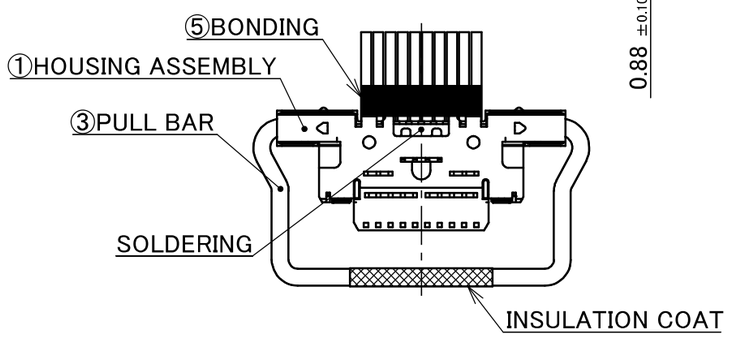

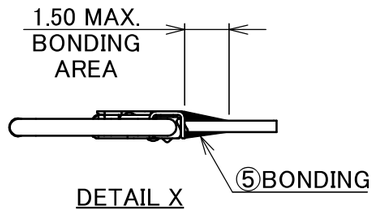

DETAIL X
(S=5/1)

PIN ASSIGNMENT		
CONNECTOR 1	CABLE	CONNECTOR 2
10	MICRO-COAXIAL CABLE AWG#40 50 OHM, BLUE	1
⋮	MICRO-COAXIAL CABLE AWG#40 50 OHM, BLUE	⋮
1	MICRO-COAXIAL CABLE AWG#40 50 OHM, BLUE	10

NOTE.
1. TO HANDLE THIS CONNECTOR
   YOU MUST READ AND FOLLOW THE INSTRUCTION MANUAL BELOW.
   I-PEX INSTRUCTION MANUAL No.HIM-09008.
2. ELECTRIC CHARACTERICTICS
   WITHSTANDVOLTAGE : AC 250V LEAKAGE CURRENT 2.0mA MAX.
   INSULATION RESISTANCE : 50MΩ MIN. DC 100V
3. THE OPERATING TEMPERATURE OF THE HARNESS : 80℃ MAX.
4. RATING VOLTAGE : 30V

NO.	DESCRIPTION	PARTS NO.	QTY	REMARKS
6	ACETATE TAPE	–	3	BLACK
5	BONDING	–	–	UV GLUE
4	CABLE	–	10	MICRO-COAXIAL CABLE AWG#40 50 OHM, BLUE
3	PULL BAR	2766-0101	2	CONNECTOR 1&2
2	SHELL-A	2764-0101-003	2	CABLINE®-CA PLUG P/N : 20633-310T-01S
1	HOUSING ASSEMBLY	20634-210T-02	2	CONNECTOR TO BE MATED : 20525-210E-02

REV.	ECN	BY	DATE	APP.
0	Z250808	K.B	May/22/'25	–

REVISION RECORD

ANGLE	±2°	6 OVER 30 MAX.	±0.3
6 MAX.	±0.2	30 OVER 120 MAX.	±0.5

GENERAL TOLERANCE.

DWG. K.Baba	DATE 2025/05/22
CHK. R.Takei	
APP. H.Ikari	

PROJECTION

SERIES No. IH-200016

CUSTOMER COPY

TITLE: CABLINE®-CA 10P HARNESS

SCALE 2:1 | UNIT mm | SIZE A3 | SHEET 1/1 | REV. 0

DWG. No. 82434

I-PEX