PART No.
91437-0001

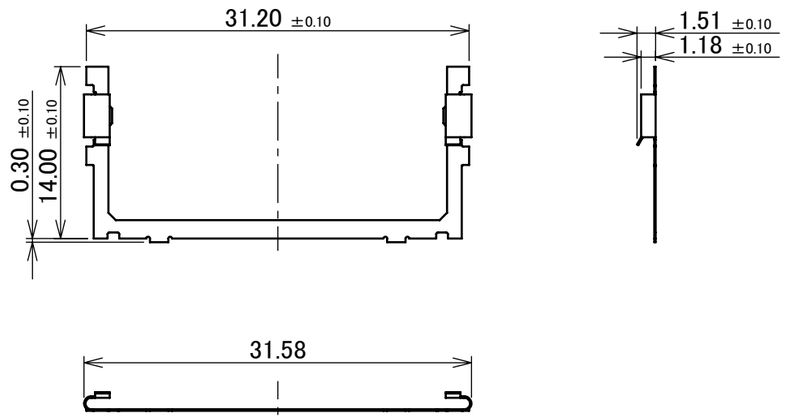

NOTES.
1. MATERIAL : CORSON ALLOY
2. FINISH : Sn over Ni
3. WARP : 0.1 mm MAX.

REV.	ECN	BY	DATE	APP.
0	Z211519	KOH	21/12/09	

REVISION RECORD

ANGLE	±2°	6 OVER 30 MAX.	±0.3
6 MAX.	±0.2	30 OVER 120 MAX.	±0.5

GENERAL TOLERANCE.

DWG. K.Nisiyama DATE 2021/12/09
CHK.
APP. Y.Hashimoto 2021/12/09

PROJECTION
SERIES No. R0
CUSTOMER COPY
TITLE ANCHOR
SCALE 2:1
UNIT mm
I-PEX
DWG. No. 91437
SIZE A3
SHEET 1/1
REV. 0