Recommended P/N	20531-0**T-02			
PART No.	A	B	C	D
20531-030T-#2	10.3	11.6	9.2	5.0
20531-034T-#2	11.3	12.6	10.2	6.0
20531-040T-#2	12.8	14.1	11.7	7.5
20531-050T-#2	15.3	16.6	14.2	10.0

20531-0 ** T- # 2
SEE TABLE.1
Pos.

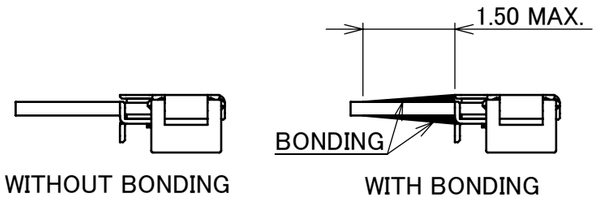

ASSEMBLY STATE
※WE RECOMMEND BONDING THE CABLE AND CONNECTOR TO PROTECT THE CABLE.

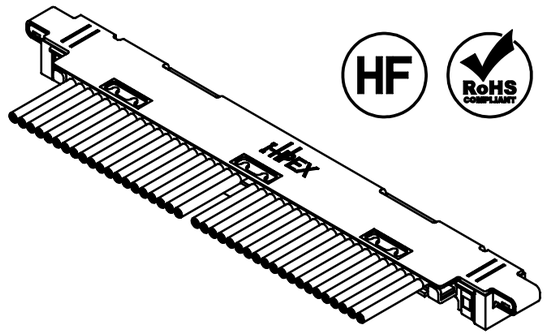

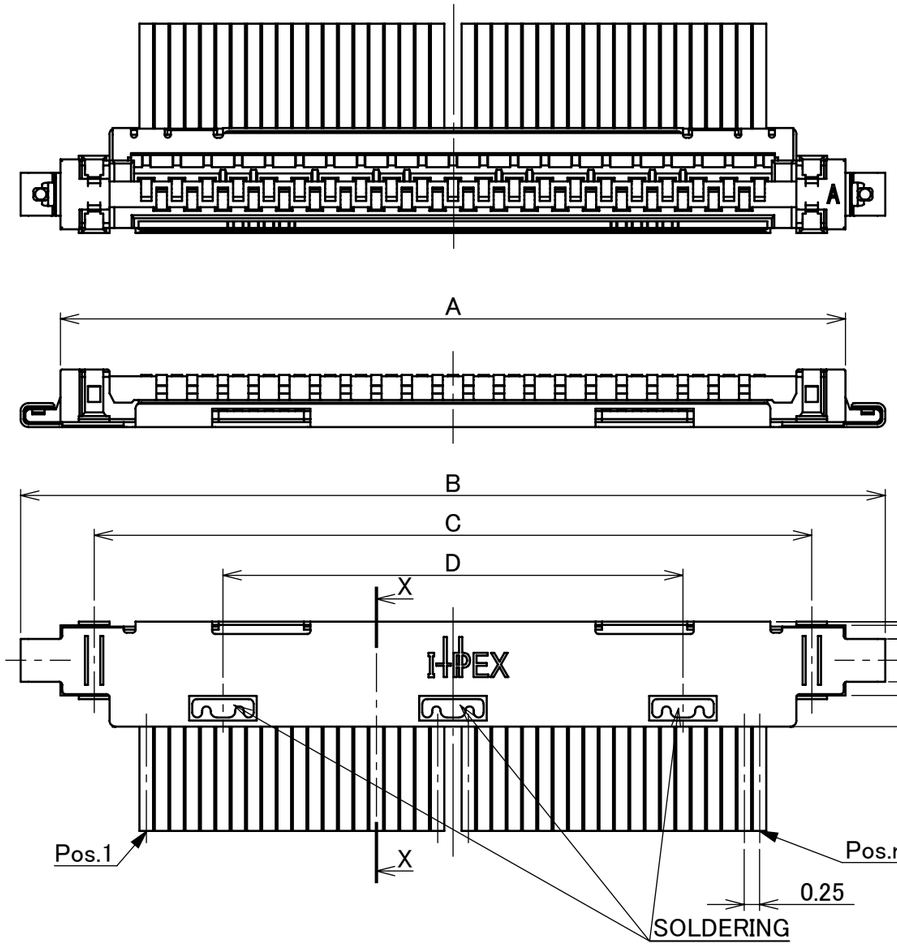

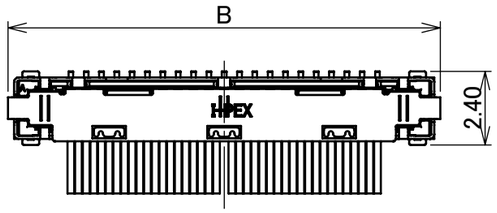

MATING SIZE
(S=5/1)

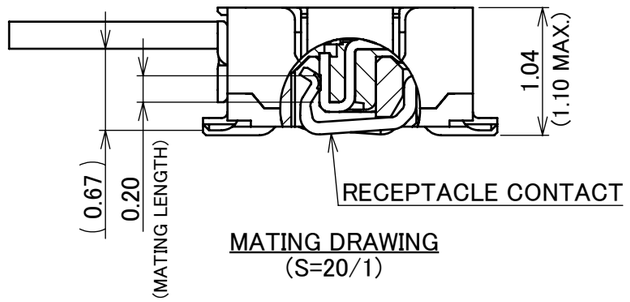

MATING DRAWING
(S=20/1)

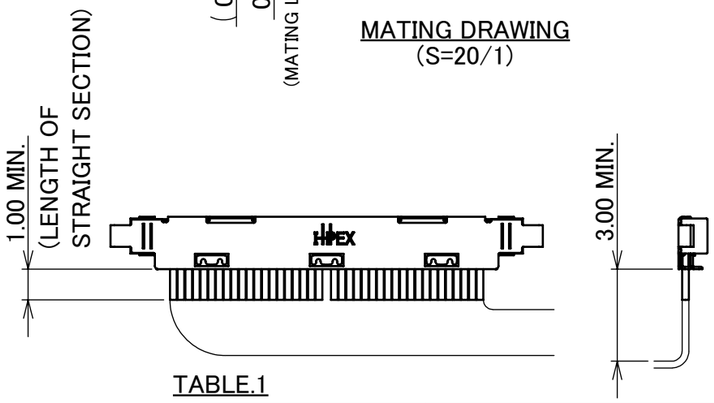

TABLE.1

PART NO.	CONTACT MATERIAL
20531-0**T-02	PHOSPHOR BRONZE
20531-0**T-12	CORSON ALLOY

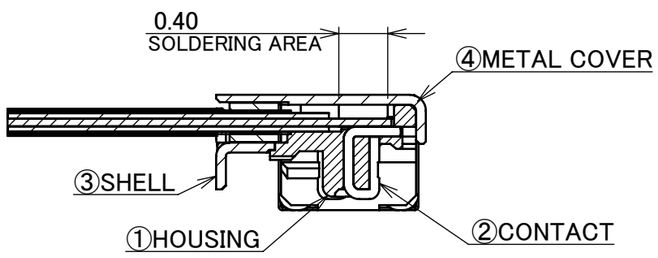

SECT. X-X
(S=20/1)

NO.	DISCRIPTION	MATERIAL	FINISH , REMARKS
4	METAL COVER	SUS	Au 0.05 μm MIN. OVER Ni 1.0 μm MIN.
3	SHELL	PHOSPHOR BRONZE	Au 0.05 μm MIN. OVER Ni 1.0 μm MIN.
2	CONTACT	SEE ABOVE TABLE.1	Au 0.1 μm MIN. OVER Ni 1.0 μm MIN.
1	HOUSING	LCP	UL94V-0 ,BLACK

REV.	ECN	BY	DATE	APP.
13	Z240044	RYO	Jan./12/'24	H.I
12	Z200314	A.K	Mar./26/'20	Y.S
11	Z190765	A.K	June/7/'19	H.I
10	Z190729	A.K	May/31/'19	Y.S
9	Z180877	A.K	Sept./24/'18	H.I
8	Z180254	R.H	Mar./14/'18	M.T

REVISION RECORD

GENERAL TOLERANCE.			
ANGLE	±2°	6 OVER 30 MAX.	±0.3
6 MAX.	±0.2	30 OVER 120 MAX.	±0.5

DWG. M.Takemoto
DATE 2010/07/08
CHK.
APP. E.Kawabe

PROJECTION
SERIES No. R3R1
CUSTOMER COPY

TITLE
CABLINE® -UX II
PLUG FOR
CABLE ASSEMBLY

SCALE 10:1
UNIT mm
I-PEX

DWG. No. 20531
SIZE A3
SHEET 1/4
REV. 13

ITEMS	SPECIFICATION
APPLICABLE CABLE	MICRO-COAXIAL CABLE : AWG# 44 ,46 DISCRETE WIRE : AWG#39
RATING VOLTAGE	50V AC (PER CONTACT PIN)
RATING AMPERAGE (FOR CONTACT)	CONTACT MATERIAL : PHOSPHOR BRONZE (PLUG : 20531-0**T-02 ,RECEPTACLE : 20533-0**E) 0.50A AC/DC [AWG#39] (PER CONTACT PIN / UP TO 6 CONTACTS) 0.15A AC/DC [AWG#44] 0.10A AC/DC [AWG#46] CONTACT MATERIAL : CORSON ALLOY (PLUG : 20531-0**T-12 ,RECEPTACLE : 20533-0**E-01) 0.50A AC/DC [AWG#39] (PER CONTACT PIN / UP TO 8 CONTACTS) 0.19A AC/DC [AWG#44] 0.14A AC/DC [AWG#46]
OPERATING TEMPERATURE	233～358K(-40℃～+85℃)
OPERATING HUMIDITY	75% MAX.(NON-CONDENSING)
CONTACT RESISTANCE	INITIAL : 450mohm MAX.(AWG#39) 1080mohm MAX.(AWG#44) 1880mohm MAX.(AWG#46) AFTER TEST : ⊿40mohm MAX.
GROUND SHELL RESISTANCE	INITIAL : 100mohm MAX. / AFTER TEST : ⊿40mohm MAX.
INSULATION RESISTANCE	INITIAL : 100Mohm MIN. / AFTER TEST : 100Mohm MIN.
DIELECTRIC WITHSTANDING VOLTAGE	AC100V 1min
DURABILITY	20 CYCLES
MATING FORCE (INITIAL / AFTER TEST)	30P : 26.4N MAX. 34P : 27.6N MAX. 40P : 29.4N MAX. 50P : 32.4N MAX.
UNMATING FORCE (INITIAL / AFTER TEST)	30P : 1.5N MIN. 34P : 1.9N MIN. 40P : 2.5N MIN. 50P : 3.5N MIN.
CABLE RETENTION FORCE	30P : 15.0N MIN. 34P : 17.0N MIN. 40P : 20.0N MIN. 50P : 25.0N MIN.
PRODUCT SPECIFICATION	PRS-1555
TEST REPORT	TR-10051
INSTRUCTION MANUAL	HIM-10001
ASSEMBLY MANUAL	ASM-10001
APPEARANCE CRITERIA No.	QLS-A***

ANGLE	±2°	6 OVER 30 MAX.	±0.3	PROJECTION	SERIES No.	CUSTOMER COPY	
6 MAX.	±0.2	30 OVER 120 MAX.	±0.5		R3R1		
GENERAL TOLERANCE.				TITLE CABLINE® -UX II PLUG FOR CABLE ASSEMBLY	SCALE 5:1	I-PEX	
DWG.		DATE			UNIT mm		
CHK.							
APP.				DWG. No. 20531	SIZE A3	SHEET 2/4	REV. 13

PART No.	E	F	G
20531-030T-#2	3.5	7.5	8.5
20531-034T-#2	4.0	8.5	9.5
20531-040T-#2	4.75	10.0	11.0
20531-050T-#2	6.0	12.5	13.5

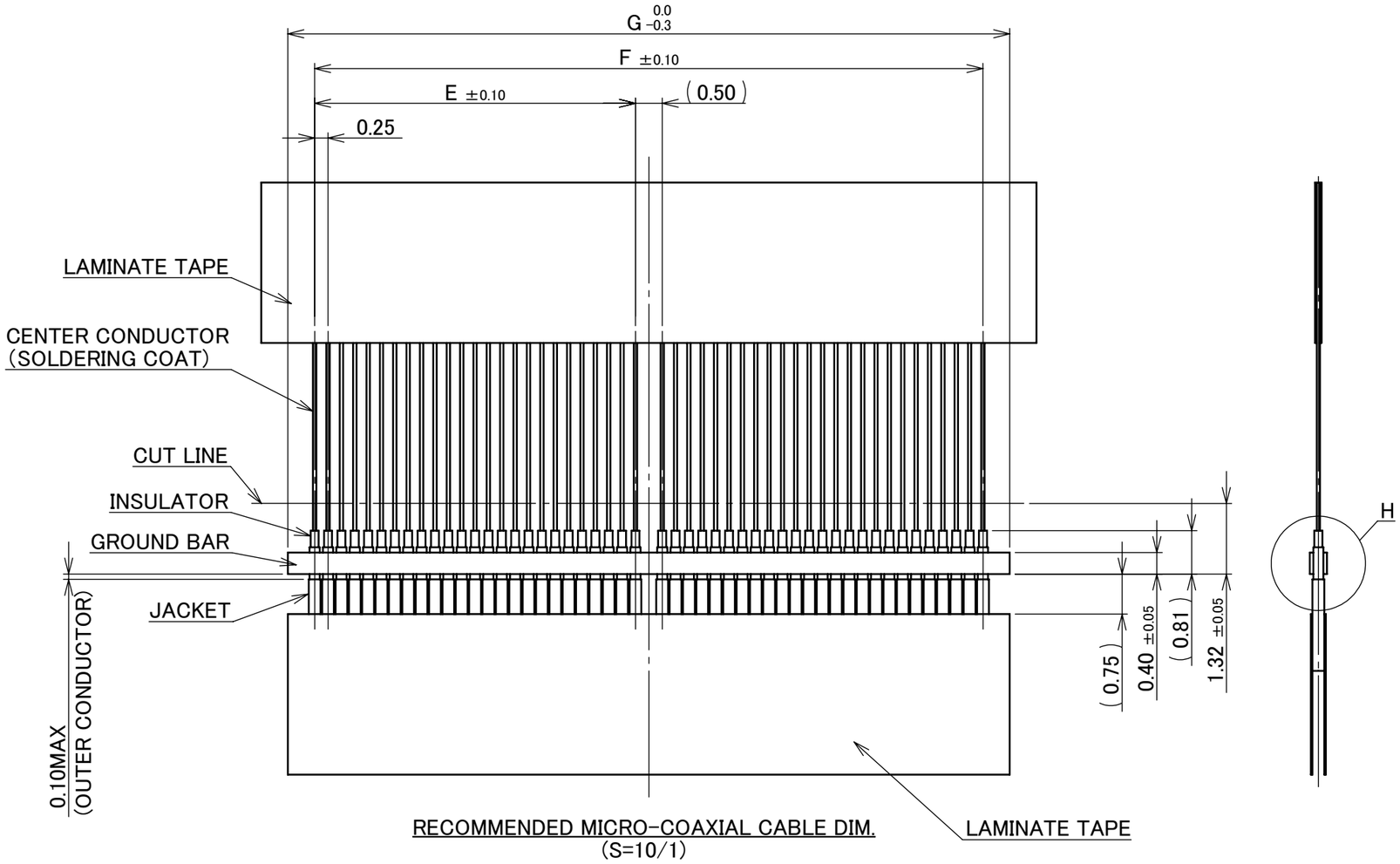

MICRO-COAXIAL CABLE DIMENSION

	a
#44	φ0.063
#46	φ0.048

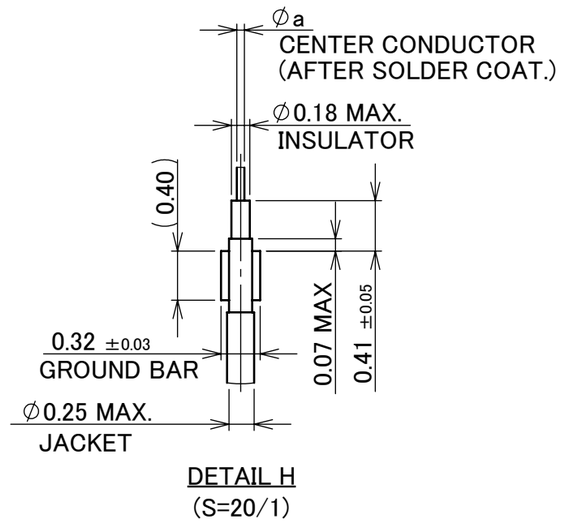

DETAIL H
(S=20/1)

ANGLE ±2°	6 OVER 30 MAX. ±0.3	PROJECTION	SERIES No.	CUSTOMER COPY	
6 MAX. ±0.2	30 OVER 120 MAX. ±0.5		R3R1		
GENERAL TOLERANCE.		TITLE CABLINE® -UX II PLUG FOR CABLE ASSEMBLY		SCALE 10:1	I-PEX
DWG.	DATE			UNIT mm	
CHK.					
APP.		DWG. No. 20531		SIZE A3	SHEET 3/4 REV. 13

PART No.	E	F
20531-030T-#2	3.5	7.5
20531-034T-#2	4.0	8.5
20531-040T-#2	4.75	10.0
20531-050T-#2	6.0	12.5

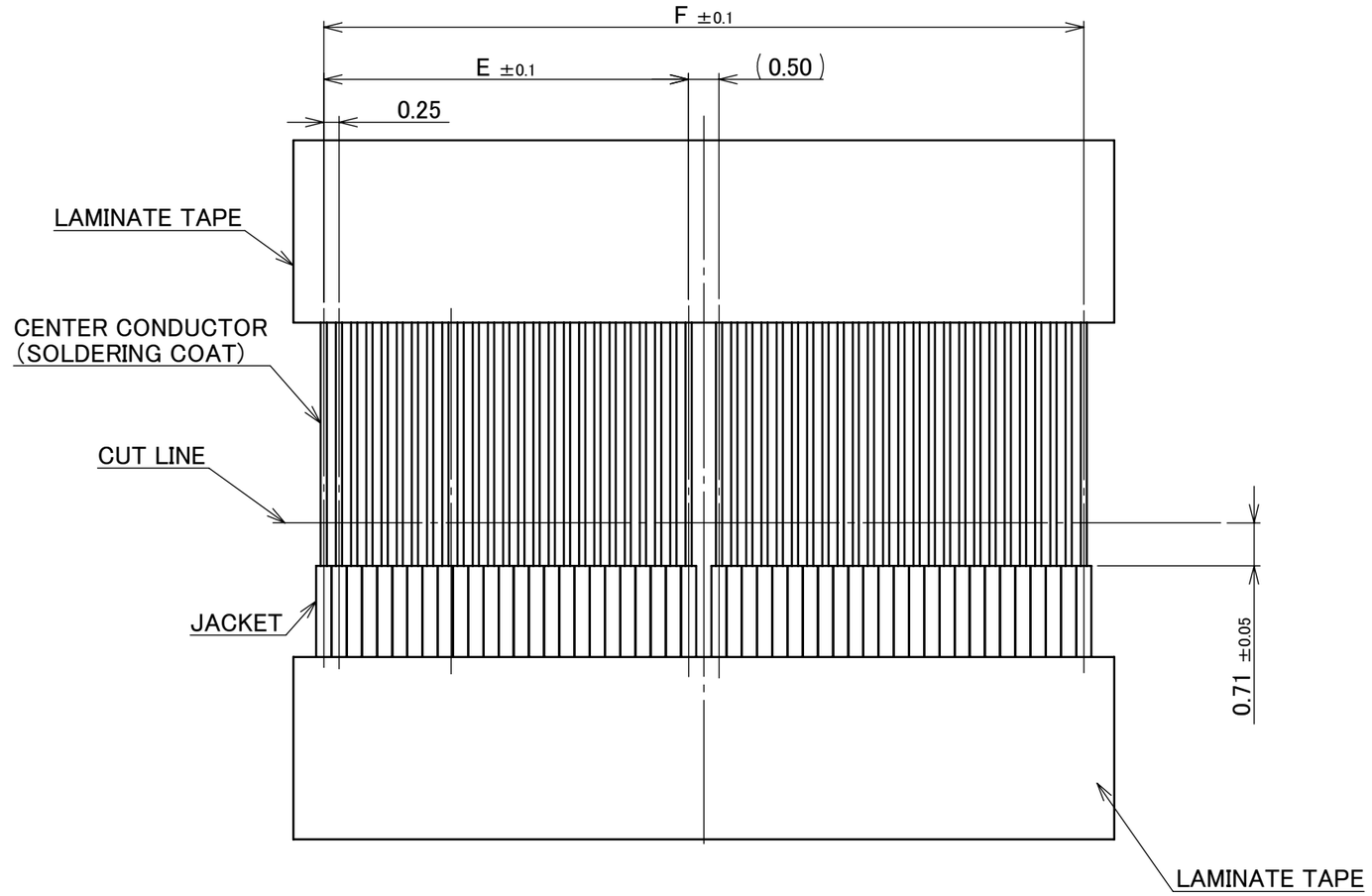

RECOMMENDED DISCRETE WIRE DIM.
(S=10/1)

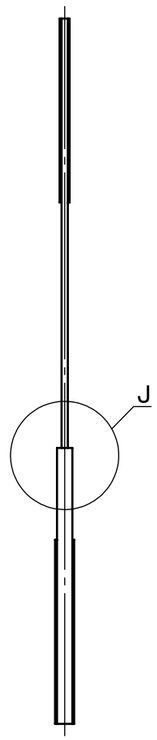

DISCRETE WIRE DIMENSION

	a
#39	ϕ0.102

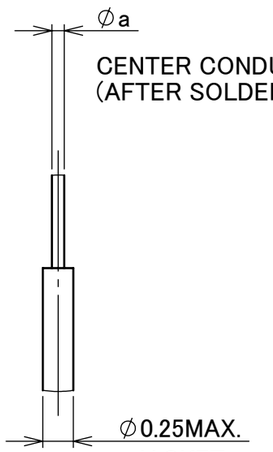

DETAIL J
(S=20/1)

ANGLE ±2°	6 OVER 30 MAX. ±0.3	PROJECTION	SERIES No.	CUSTOMER COPY		
6 MAX. ±0.2	30 OVER 120 MAX. ±0.5		R3R1			
GENERAL TOLERANCE.		TITLE		SCALE		
DWG.	DATE	CABLINE® -UX II PLUG FOR CABLE ASSEMBLY		10:1	I-PEX	
CHK.				UNIT mm		
APP.		DWG. No. 20531		SIZE A3	SHEET 4/4	REV. 13