Recommended P/N	20978-040T-01

PART NO.	Pos.
20978-040T-01	40

Halogen Free

RoHS Compliant

BOTTOM VIEW

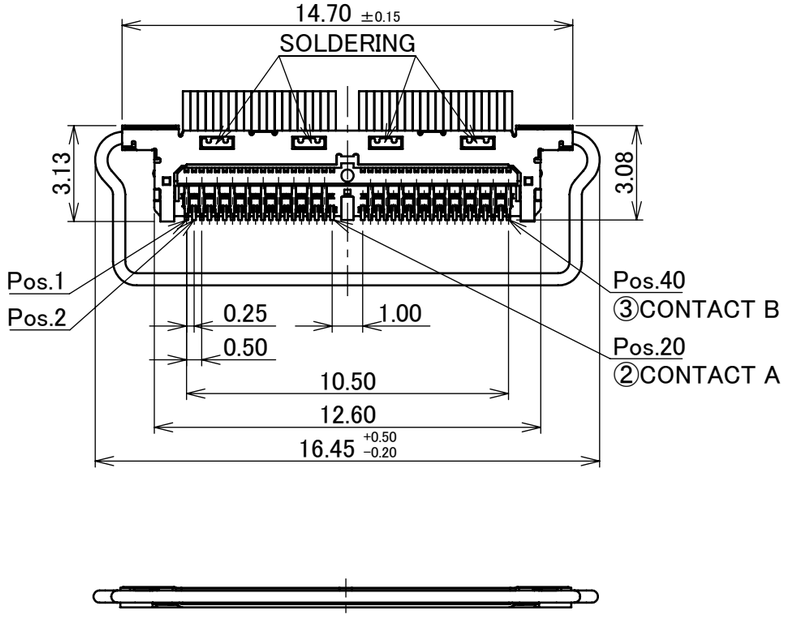

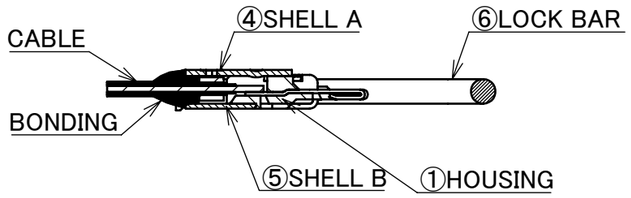

SECT. AA-AA
(S= 10 : 1)

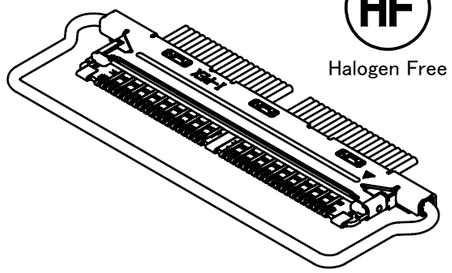

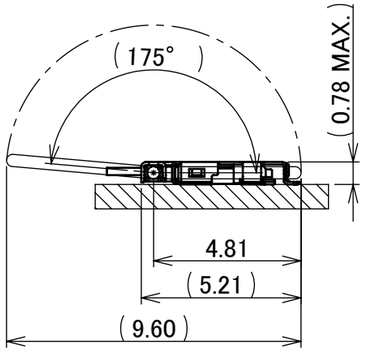

LOCK BAR MOVEMENT

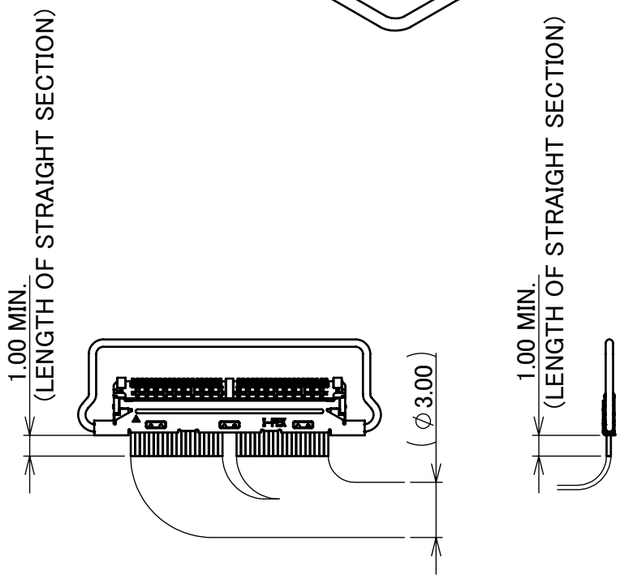

RECOMMENDED CABLE BENDING DIMENSIONS

TOP VIEW

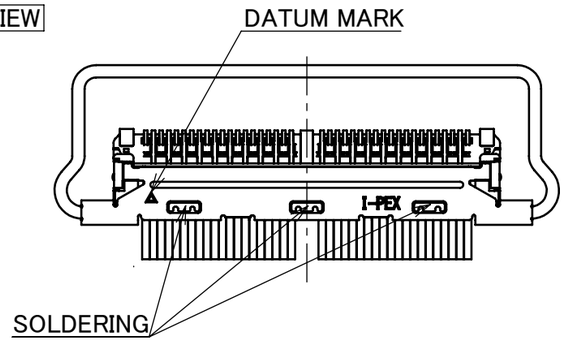

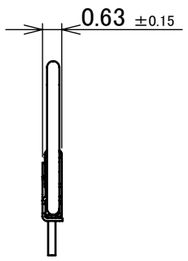

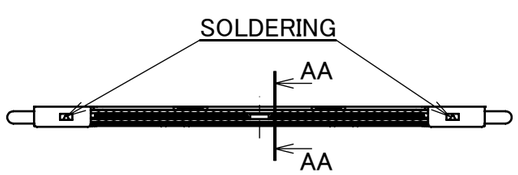

NO.	DISCRIPTION	MATERIAL	FINISH , REMARKS
6	LOCK BAR	SUS	–
5	SHELL B	SUS	PARTIAL Au 0.003 μm MIN. OVER Ni 1.00 μm MIN.
4	SHELL A	SUS	PARTIAL Au 0.003 μm MIN. OVER Ni 1.00 μm MIN.
3	CONTACT B	CORSON ALLOY	CONTACT AREA : Au 0.25 μm MIN. OVER Ni 2.00 μm MIN. SOLDERING AREA : Au 0.03 μm MIN. OVER Ni 1.00 μm MIN.
2	CONTACT A	CORSON ALLOY	CONTACT AREA : Au 0.25 μm MIN. OVER Ni 2.00 μm MIN. SOLDERING AREA : Au 0.03 μm MIN. OVER Ni 1.00 μm MIN.
1	HOUSING	LCP	UL94V-0, BLACK

REV.	ECN	BY	DATE	APP.
2	Z240027	R.H	2024/01/10	H.I
1	Z230096	R.H	2023/01/24	H.I
0	Z191044	S.Y	2019/08/08	

REVISION RECORD

GENERAL TOLERANCE.			
ANGLE	±2°	6 OVER 30 MAX.	±0.3
6 MAX.	±0.2	30 OVER 120 MAX.	±0.5

PROJECTION

SERIES No. R1/R0/R0

CUSTOMER COPY

DWG. S.Yamaguchi DATE 2019/08/08

CHK. T.Kurachi

APP. Y.Shimada

TITLE CABLINE® -CX II PLUG WITHOUT COVER CABLE ASSEMBLY

DWG. No. 20978

SCALE 5:1

UNIT mm

SIZE A3

SHEET 1/3

REV. 2

I-PEX

Confidential C

I-PEX Inc.

QKE-DFFDE06-02 REV.12

ITEMS	SPECIFICATION
APPLICABLE CABLE	MICRO-COAXAL CABLE : AWG# 46,44,39 DISCRETE WIRE : AWG# 39
RATING VOLTAGE	100V AC (PER CONTACT PIN)
RATING AMPERAGE (FOR CONTACT)	0.10A AC/DC [AWG#46] PER CONTACT PIN/UP TO 40 CONTACTS 0.15A AC/DC [AWG#44] PER CONTACT PIN/UP TO 40 CONTACTS 0.50A AC/DC [AWG#39] PER CONTACT PIN/UP TO 7 CONTACTS ※TESTING BY A REAL MACHINE IS RECOMMENDED BECAUSE TEMPERTURE RISE MAY AFFECTED BY ACTUAL SITUATION
OPERATING TEMPERATURE	233～358K(-40℃～+85℃) (CONTAINING TEMPERATURE RISE BY CURRENT)
OPERATING HUMIDITY	85% MAX.(NON-CONDENSING)
CONTACT RESISTANCE	INITIAL : 388mohm MAX.(AWG#39) / AFTER TEST : ⊿40mohm MAX. INITIAL : 1,080mohm MAX.(AWG#44) INITIAL : 1,830mohm MAX.(AWG#46)
GROUND SHELL RESISTANCE	INITIAL : 50mohm MAX. / AFTER TEST : ⊿40mohm MAX.
INSULATION RESISTANCE	INITIAL : 1,000Mohm MIN. / AFTER TEST : 500Mohm MIN.
DIELECTRIC WITHSTANDING VOLTAGE	AC250V 1min
DURABILITY	20 CYCLES
MATING FORCE (INITIAL / 20 CYCLES)	40P : 30.0N MAX.
UNMATING FORCE (INITIAL / 20 CYCLES)	40P : 4.0N MIN.
CABLE RETENTION FORCE	40P : 19.60N MIN.
PRODUCT SPECIFICATION	PRS-2403
TEST REPORT	TR-17063
INSTRUCTION MANUAL	HIM-17040
ASSEMBLY MANUAL	ASM-17011
APPEARANCE CRITERIA No.	QLS-A***

ANGLE ±2°	6 OVER 30 MAX. ±0.3	PROJECTION	SERIES No.	CUSTOMER COPY			
6 MAX. ±0.2	30 OVER 120 MAX. ±0.5		R1/R0/R0				
GENERAL TOLERANCE.		TITLE		SCALE			
DWG.	DATE	CABLINE® -CX II PLUG WITHOUT COVER CABLE ASSEMBLY		5:1	I-PEX		
CHK.				UNIT mm			
APP.		DWG. No.		SIZE	SHEET	REV.	
		20978		A3	2/3	2	

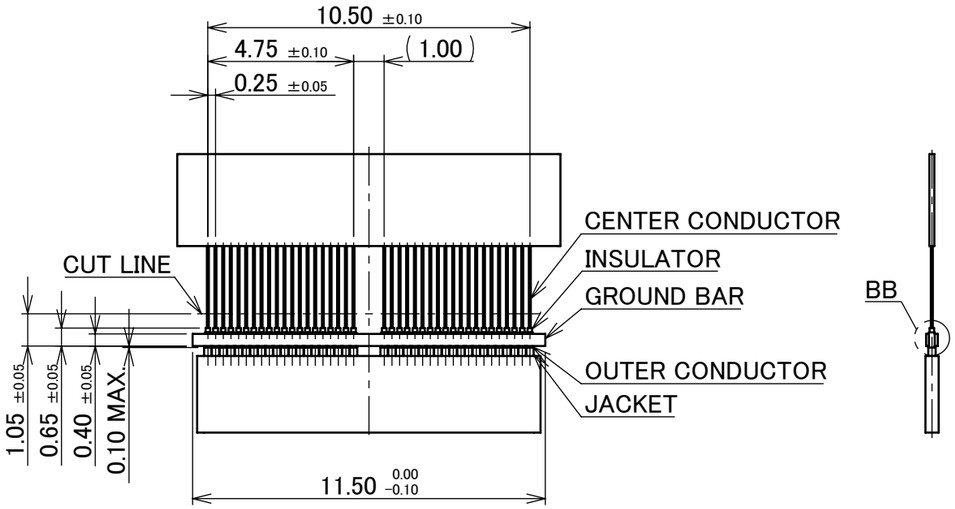

RECOMMENDED MICRO-COAXIAL CABLE DIMENSIONS

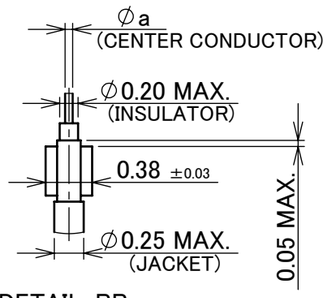

DETAIL. BB
(S= 20 : 1)

CHARACTERISTIC IMPEDANCE MATCHING MICRO-COAXIAL CABLE

	a
#44	0.063
#46	0.048

CHARACTERISTIC IMPEDANCE UN-MATCHING MICRO-COAXIAL CABLE

	a
#39	0.102

MICRO-COAXIAL CABLE #39 : NOT RECOMMENDED
FOR HIGH SPEED SIGNAL TRANSFER

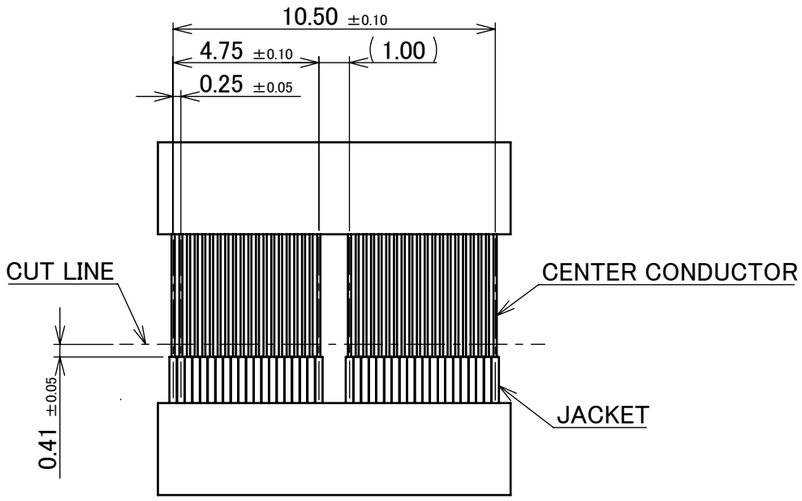

RECOMMENDED DISCRETE WIRE DIMENSIONS

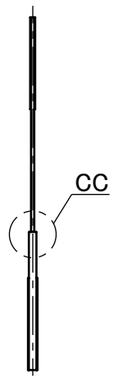

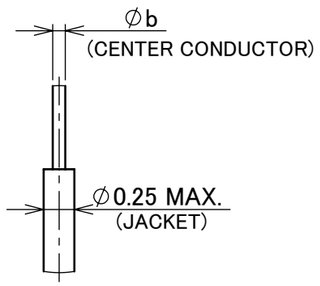

DETAIL CC
(S= 20 : 1)

DISCRETE WIRE DIMENSION

	b
#39	0.102

ANGLE	±2°	6 OVER 30 MAX.	±0.3	PROJECTION	SERIES No.	CUSTOMER COPY	
6 MAX.	±0.2	30 OVER 120 MAX.	±0.5		R1/R0/R0		
GENERAL TOLERANCE.				TITLE		SCALE	
DWG.		DATE		CABLINE® -CX II PLUG WITHOUT COVER CABLE ASSEMBLY		5:1	I-PEX
CHK.						UNIT mm	
APP.				DWG. No. 20978		SIZE A3	SHEET 3/3 / REV. 2