PART No.	PIN ASSIGNMENT	CABLE LENGTH	DIFFERENTIAL LANE:C
82065-600B-02-D	A	500.00±10.00	TWINAXIAL CABLE, AWG #34 85 OHM
82065-600B-04-D	B	500.00±10.00	
82065-100B-01-D	A	200.00±5.00	MICRO COAXIAL CABLE, AWG #38 42.5 OHM, BLUE
82065-100B-03-D	B	200.00±5.00	

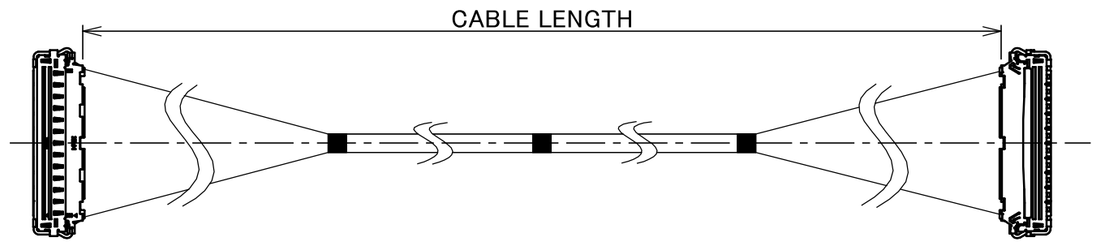

FOR PIN ASSIGNMENT A

PIN ASSIGNMENT		
CONNECTOR 1	CABLE	CONNECTOR 2
60	NO CABLE	60
59	MICRO COAXIAL CABLE, AWG #38 42.5 OHM, BLUE	59
▪ ▪	▪ ▪	▪ ▪
53	MICRO COAXIAL CABLE, AWG #38 42.5 OHM, BLUE	53
52	GROUND	52
51	C(*) SEE THE UPPER TABLE TO FIND CABLE SPEC.	51
50		50
49	GROUND	49
48	C(*) SEE THE UPPER TABLE TO FIND CABLE SPEC.	48
47		47
46	GROUND	46
▪ ▪	▪ ▪	▪ ▪
9	C(*) SEE THE UPPER TABLE TO FIND CABLE SPEC.	9
8		8
7	GROUND	7
6	C(*) SEE THE UPPER TABLE TO FIND CABLE SPEC.	6
5		5
4	GROUND	4
3	C(*) SEE THE UPPER TABLE TO FIND CABLE SPEC.	3
2		2
1	GROUND	1

FOR PIN ASSIGNMENT B

PIN ASSIGNMENT		
CONNECTOR 1	CABLE	CONNECTOR 2
60	C(*) SEE THE UPPER TABLE TO FIND CABLE SPEC.	60
59	NO CABLE	59
58	C(*) SEE THE UPPER TABLE TO FIND CABLE SPEC.	58
57	GROUND	57
56	C(*) SEE THE UPPER TABLE TO FIND CABLE SPEC.	56
55		55
54	GROUND	54
53	C(*) SEE THE UPPER TABLE TO FIND CABLE SPEC.	53
52		52
51	GROUND	51
▪ ▪	▪ ▪	▪ ▪
17	C(*) SEE THE UPPER TABLE TO FIND CABLE SPEC.	17
16		16
15	GROUND	15
14	C(*) SEE THE UPPER TABLE TO FIND CABLE SPEC.	14
13		13
12	GROUND	12
11	C(*) SEE THE UPPER TABLE TO FIND CABLE SPEC.	11
10		10
9	GROUND	9
8	MICRO-COAXIAL CABLE, AWG #38 42.5 OHM, BLUE	8
▪ ▪	▪ ▪	▪ ▪
1	MICRO-COAXIAL CABLE, AWG #38 42.5 OHM, BLUE	1

NOTE.
1. TO HANDLE THIS CONNECTOR
   YOU MUST READ AND FOLLOW THE INSTRUCTION MANUAL BELOW.
   I-PEX INSTRUCTION MANUAL No.HIM-24004.
2. ELECTRIC CHARACTERICTICS
   WITHSTANDVOLTAGE : AC 250V LEAKAGE CURRENT 2.0mA MAX.
   INSULATION RESISTANCE : 50MΩ MIN. DC 100V
3. THE OPERATING TEMPERATURE OF THE HARNESS : 80℃ MAX.

REV.	ECN	BY	DATE	APP.
7	ZM01386	K.Fu	2026/10/20	T.M
6	ZM01278	K.Fu	2026/09/10	T.M
5	ZM00091	R.T	2025/09/05	H.I
4	ZM00048	R.T	2025/08/20	H.I
3	Z250926	K.W	2025/06/10	M.T
2	Z250664	R.T	2025/04/24	H.I

REVISION RECORD

ANGLE	±2°	6 OVER 30 MAX.	±0.3	PROJECTION	SERIES No.
6 MAX.	±0.2	30 OVER 120 MAX.	±0.5		IH-200016

GENERAL TOLERANCE.

DWG. R.Takei DATE 2024/09/27

CHK. –

APP. H.Ikari

CUSTOMER COPY

TITLE: CABLINE®-CA IIP PLUS 60P HARNESS

SCALE 1:1 | UNIT mm

DWG. No. 82065 | SIZE A3 | SHEET 1/4 | REV. 7

I-PEX

Confidential C

PART No.
82065-*00B-0#-D

82065-600B-02-D 82065-600B-04-D

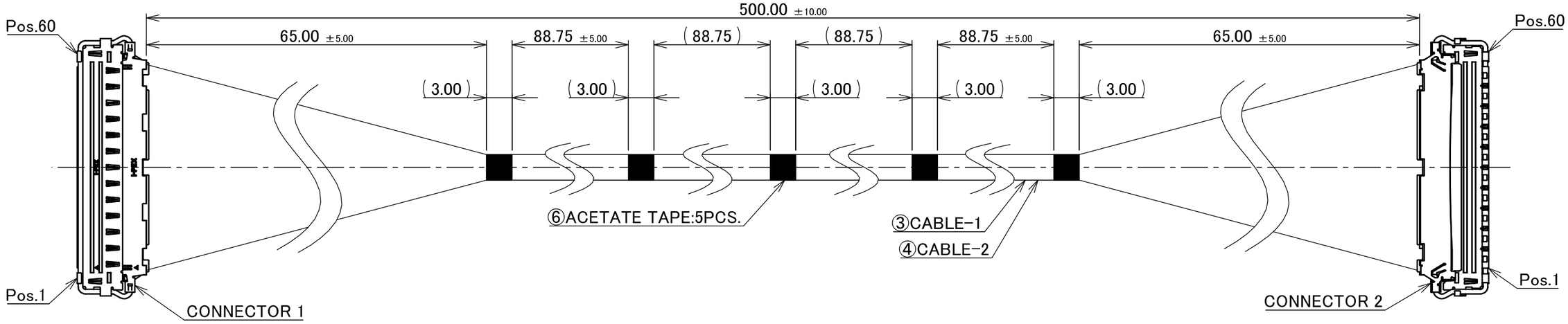

82065-100B-01-D 82065-100B-03-D

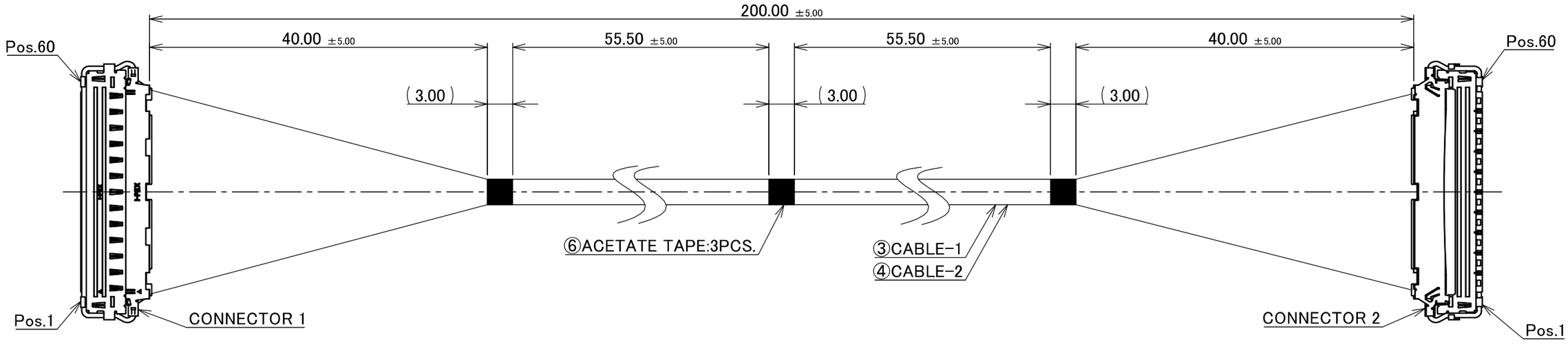

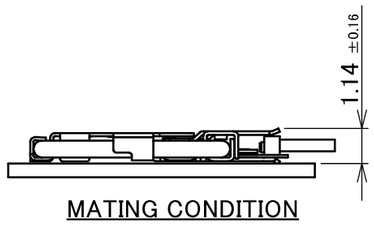

MATING CONDITION

ANGLE	±2°	6 OVER 30 MAX.	±0.3	PROJECTION	SERIES No.	CUSTOMER COPY	
6 MAX.	±0.2	30 OVER 120 MAX.	±0.5		IH-200016		
GENERAL TOLERANCE.				TITLE		SCALE	
DWG.		DATE		CABLINE®-CA IIP PLUS 60P HARNESS		2:1	I-PEX
CHK.						UNIT mm	
APP.				DWG. No.		SIZE	SHEET / REV.
				82065		A3	2/4 / 7

PART No.
82065-600B-0#-D

82065-600B-02-D

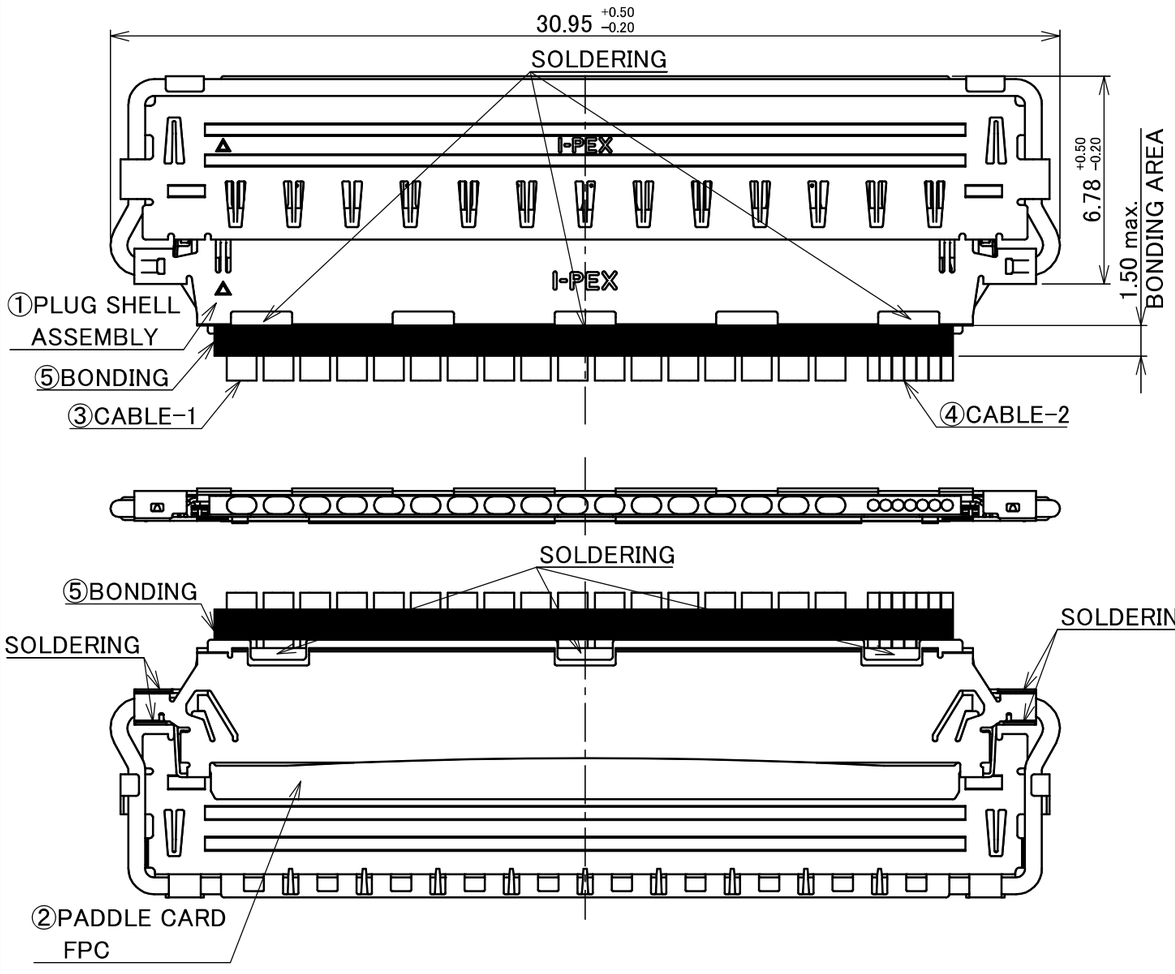

NO.	DESCRIPTION	PARTS NO.	QTY	REMARKS
6	ACETATE TAPE	–	3OR5	BLACK
5	BONDING	–	–	UV GLUE
4	CABLE-2	–	7	MICRO-COAXIAL CABLE, AWG #38 42.5 OHM, BLUE
3	CABLE-1	–	17	TWINAXIAL CABLE, AWG #34 85 OHM
2	PADDLE CARD FPC	–	2	CONNECTOR 1&2 CONNECTOR TO BE MATED : 20790-060E-02
1	PLUG SHELL ASSEMBLY	21036-060T-03	2	

82065-600B-04-D

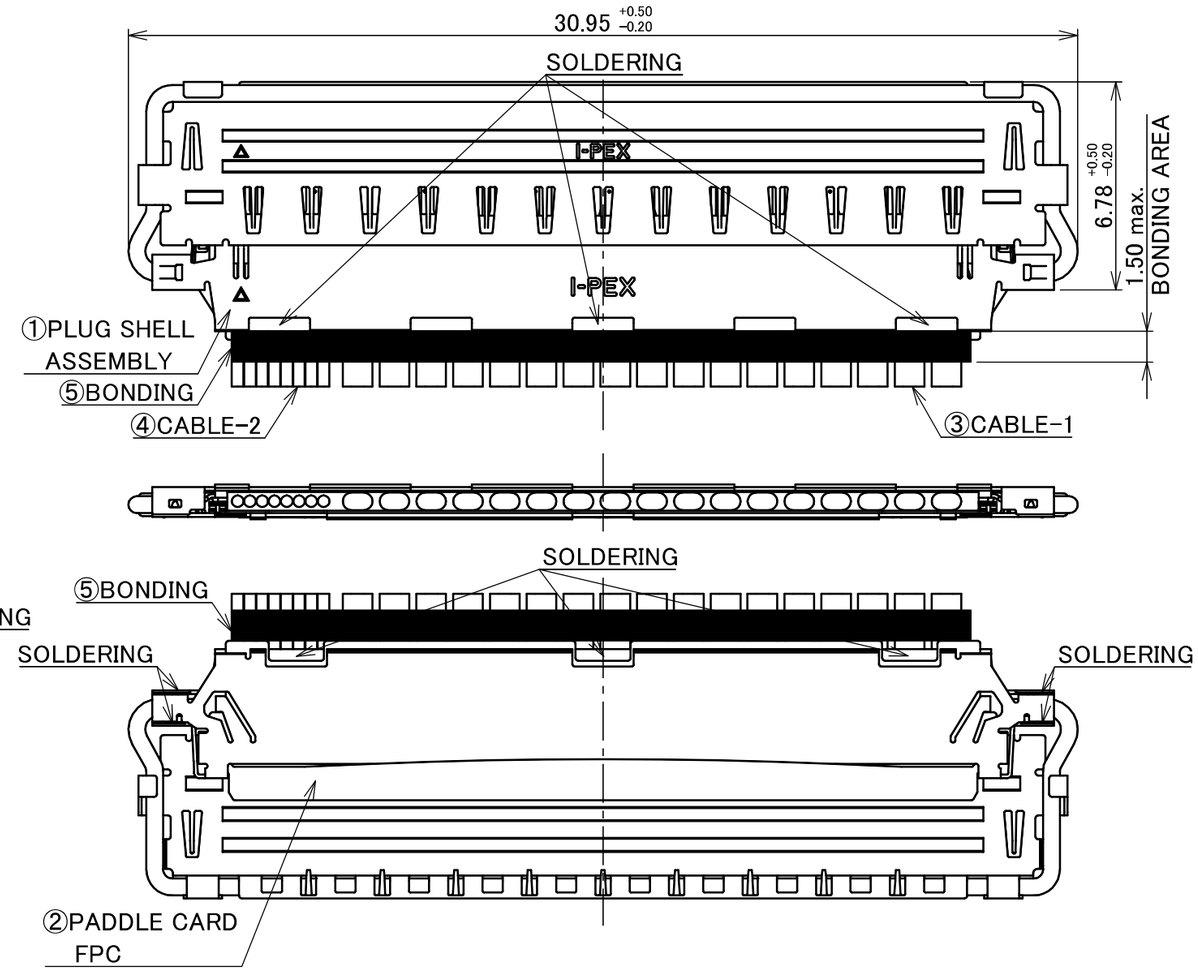

NO.	DESCRIPTION	PARTS NO.	QTY	REMARKS
6	ACETATE TAPE	–	3OR5	BLACK
5	BONDING	–	–	UV GLUE
4	CABLE-2	–	8	MICRO-COAXIAL CABLE, AWG #38 42.5 OHM, BLUE
3	CABLE-1	–	17	TWINAXIAL CABLE, AWG #34 85 OHM
2	PADDLE CARD FPC	–	2	CONNECTOR 1&2 CONNECTOR TO BE MATED : 20790-060E-02
1	PLUG SHELL ASSEMBLY	21036-060T-03	2	

ANGLE	±2°	6 OVER 30 MAX.	±0.3	PROJECTION	SERIES No. IH-200016
6 MAX.	±0.2	30 OVER 120 MAX.	±0.5		CUSTOMER COPY

GENERAL TOLERANCE.

DWG. DATE

CHK.

APP.

TITLE: CABLINE®-CA IIP PLUS 60P HARNESS

SCALE: 5:1

UNIT: mm

DWG. No.: 82065

SIZE: A3

SHEET: 3/4

REV.: 7

I-PEX

PART No.
82065-100B-0#-D

82065-100B-01-D

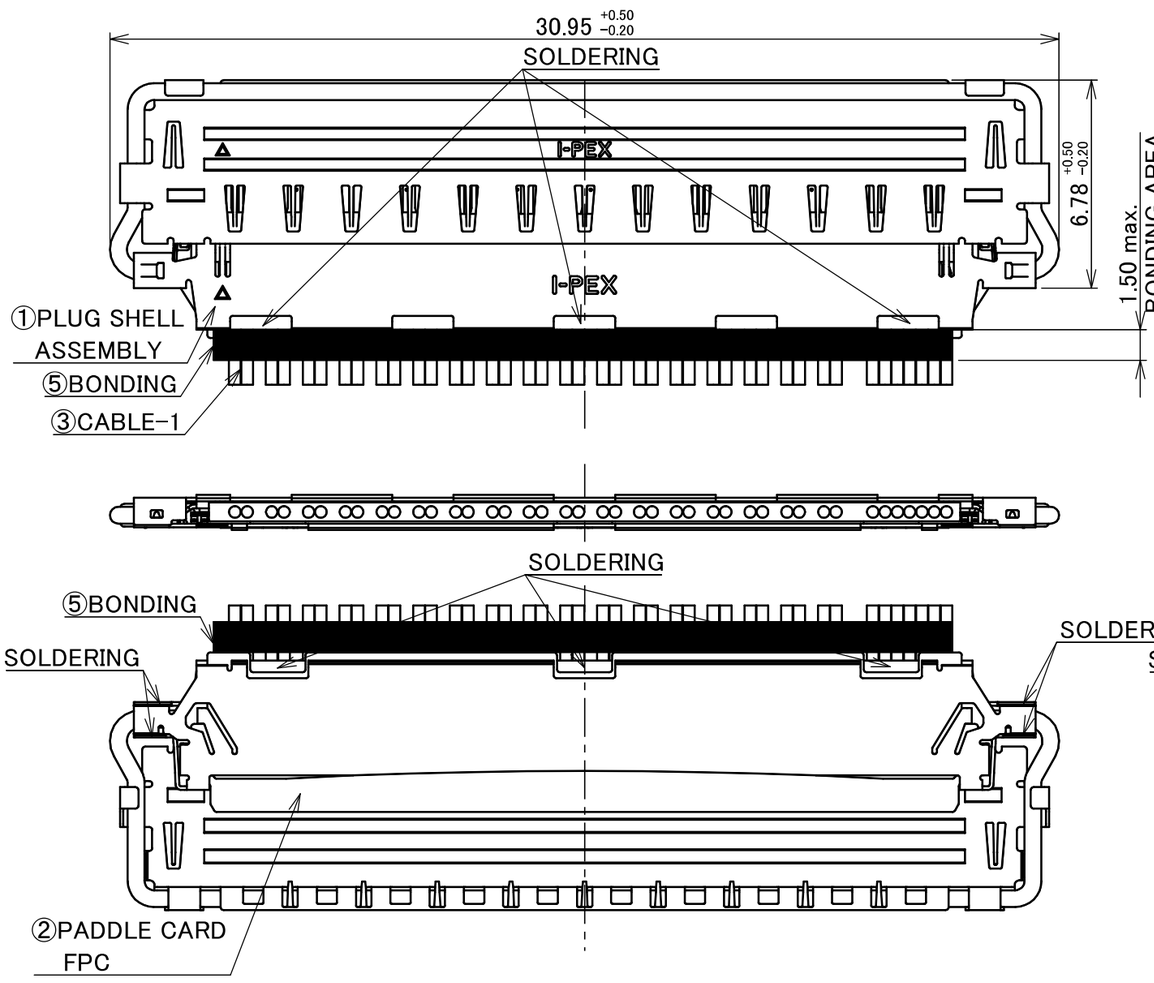

NO.	DESCRIPTION	PARTS NO.	QTY	REMARKS
6	ACETATE TAPE	–	3OR5	BLACK
5	BONDING	–	–	UV GLUE
3	CABLE-1	–	41	MICRO-COAXIAL CABLE, AWG #38 42.5 OHM, BLUE
2	PADDLE CARD FPC	–	2	CONNECTOR 1 &2 CONNECTOR TO BE MATED : 20790-060E-02
1	PLUG SHELL ASSEMBLY	21036-060T-03	2	

82065-100B-03-D

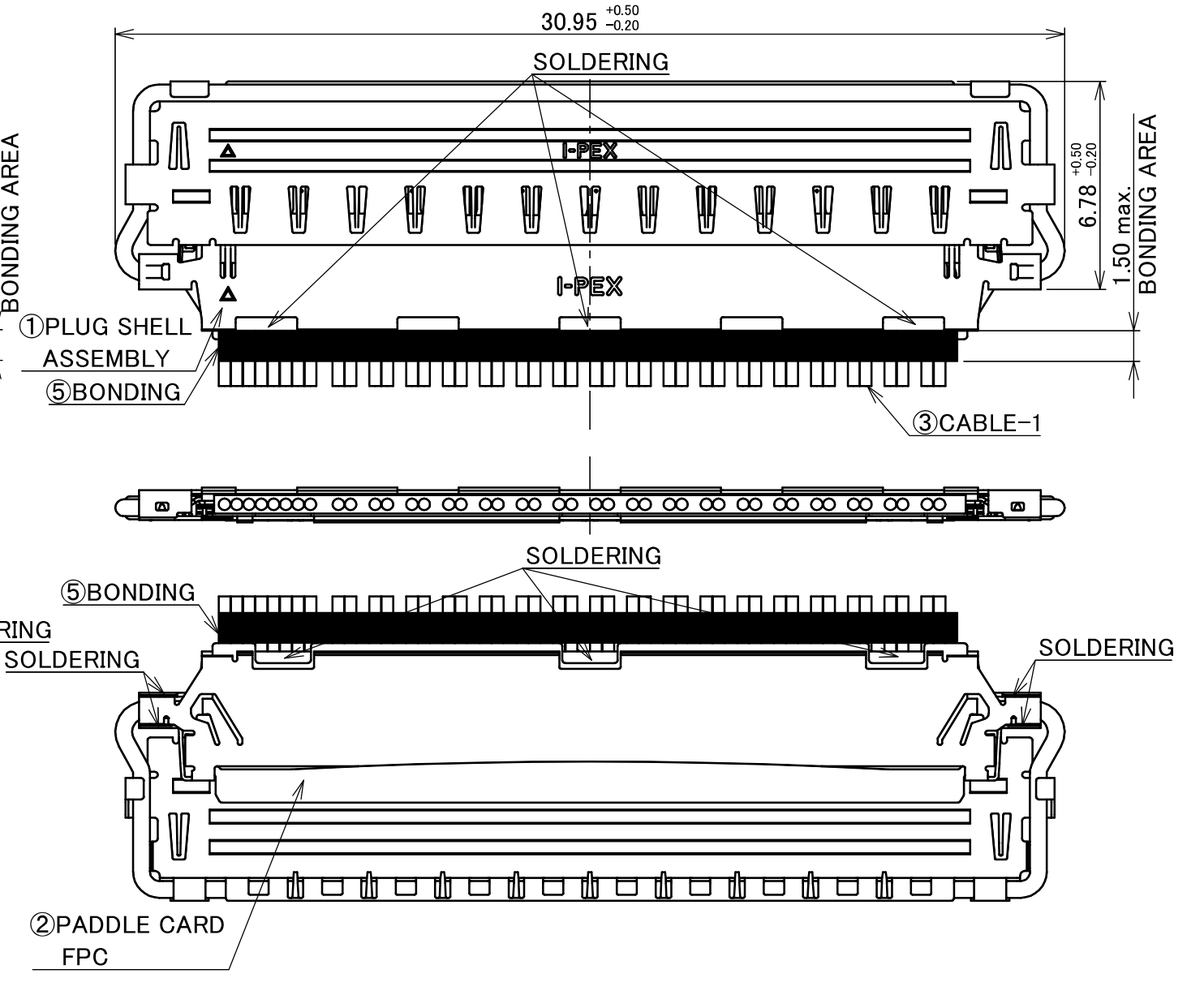

NO.	DESCRIPTION	PARTS NO.	QTY	REMARKS
6	ACETATE TAPE	–	3OR5	BLACK
5	BONDING	–	–	UV GLUE
3	CABLE-1	–	42	MICRO-COAXIAL CABLE, AWG #38 42.5 OHM, BLUE
2	PADDLE CARD FPC	–	2	CONNECTOR 1 &2 CONNECTOR TO BE MATED : 20790-060E-02
1	PLUG SHELL ASSEMBLY	21036-060T-03	2	

ANGLE	±2°	6 OVER 30 MAX.	±0.3	PROJECTION	SERIES No. IH-200016
6 MAX.	±0.2	30 OVER 120 MAX.	±0.5		CUSTOMER COPY
GENERAL TOLERANCE.				TITLE: CABLINE®-CA IIP PLUS 60P HARNESS	SCALE 5:1
DWG.	DATE				UNIT mm
CHK.					I-PEX
APP.				DWG. No. 82065	SIZE A3 / SHEET 4/4 / REV. 7