I-PEX PART NO.	HARNESS LENGTH
81863-100B-01	250

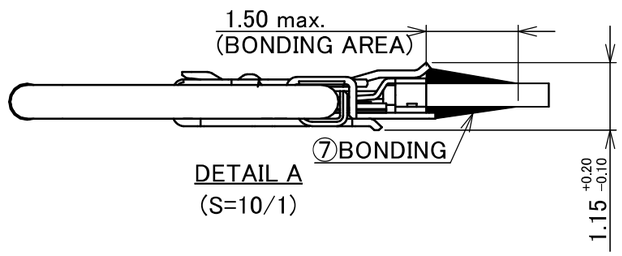

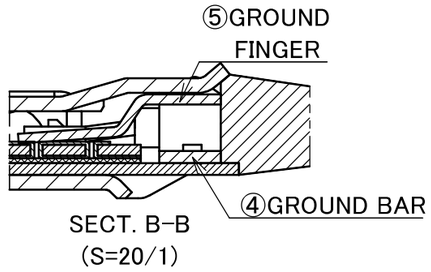

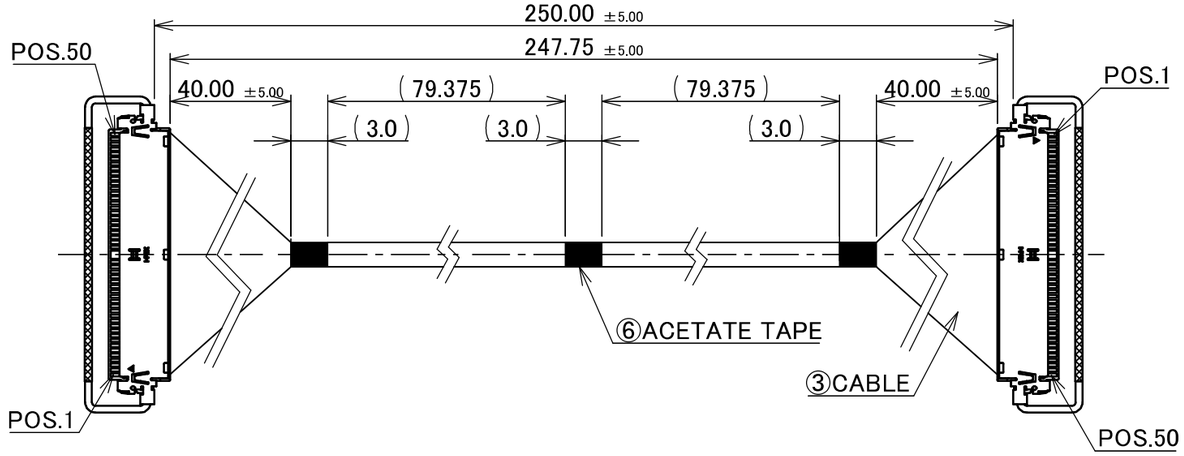

CONNECTOR 1&2
(S=5/1)

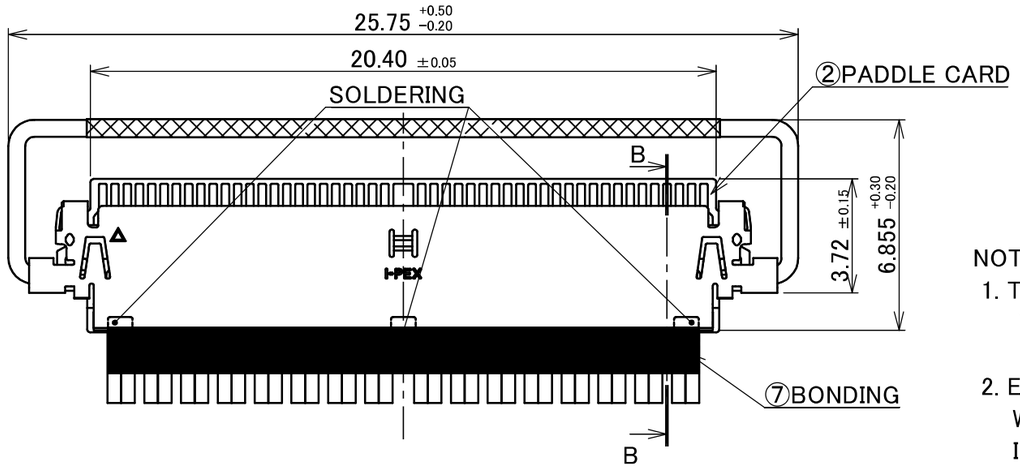

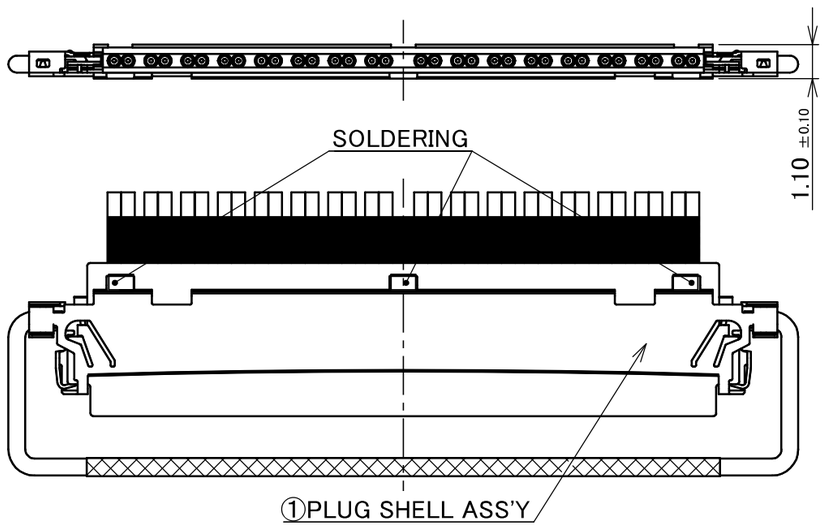

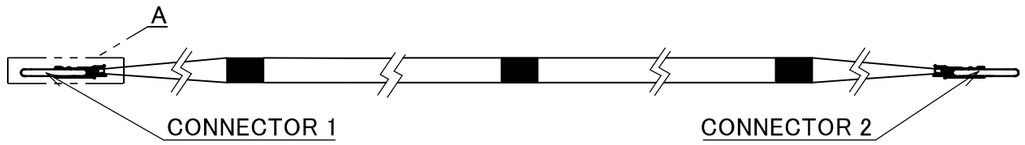

NOTE.
1. TO HANDLE THIS CONNECTOR :
   YOU MUST READ AND FOLLOW THE INSTRUCTION MANUAL BELOW.
   I-PEX INSTRUCTION MANUAL No.HIM-23013.
2. ELECTRIC CHARACTERISTICS
   WITHSTANDING VOLTAGE: AC 250V LEAKAGE CURRENT 2.0mA MAX.
   INSULATION RESISTANCE: 50MΩ MIN. DC 100V
3. THE OPERATING TEMPERATURE OF THE HARNESS: 80℃MAX.
4. MINIMUM HARNESS LENGTH: 85mm

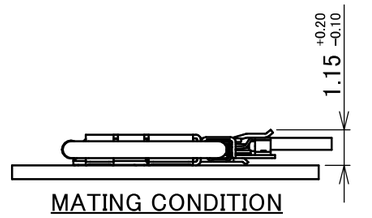

MATING CONDITION

NO.	DESCRIPTION	PARTS NO.	QTY	REMARKS
7	BONDING	–	–	UV GLUE
6	ACETATE TAPE	–	3	BLACK
5	GROUND-FINGER	–	2	–
4	GROUND-BAR	–	2	–
3	CABLE	–	32	MICRO-COAXIAL CABLE AWG #38, 45 OHM, BLUE
2	PADDLE CARD	3660-0501	2	CONNECTOR 1&2 CABLINE®-CAP PLUG SHELL ASS'Y P/N: 20993-050T-01 CONNECTOR TO BE MATED: 20525-050E-02
1	PLUG SHELL ASS'Y	20993-050T-01	2	

REV.	ECN	BY	DATE	APP.
3	ZM00091	R.T	2025/09/05	H.I
2	ZM00048	R.T	2025/08/20	H.I
1	Z231036	T.O	2023/09/04	H.I
0	Z230595	R.T	2023/05/24	–

REVISION RECORD

ANGLE	±2°	6 OVER 30 MAX.	±0.3
6 MAX.	±0.2	30 OVER 120 MAX.	±0.5

GENERAL TOLERANCE.

DWG.	R.Takei
DATE	2023/05/24
CHK.	–
APP.	H.Ikari

PROJECTION

SERIES No. IH-230010

CUSTOMER COPY

TITLE: CABLINE®-CAP 50P PADDLE CARD HARNESS

SCALE	UNIT	SIZE	SHEET	REV.
2:1	mm	A3	1/3	3

DWG. No. 81863

I-PEX

I-PEX PART NO.	HARNESS LENGTH
81863-100B-02	500

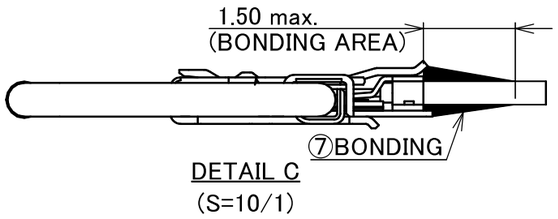

DETAIL C
(S=10/1)

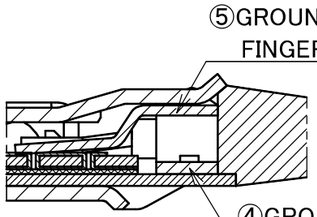

SECT. D-D
(S=20/1)

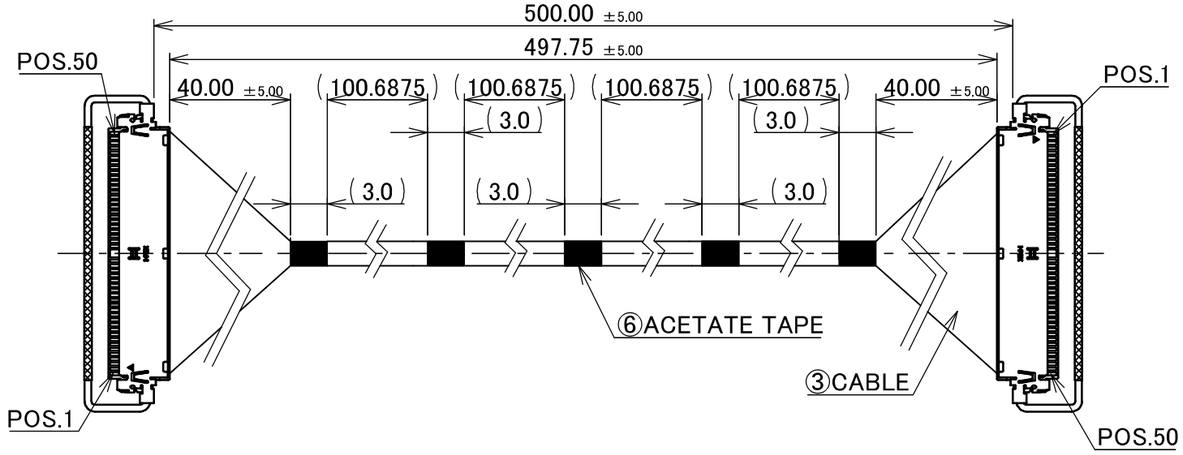

CONNECTOR 1&2
(S=5/1)

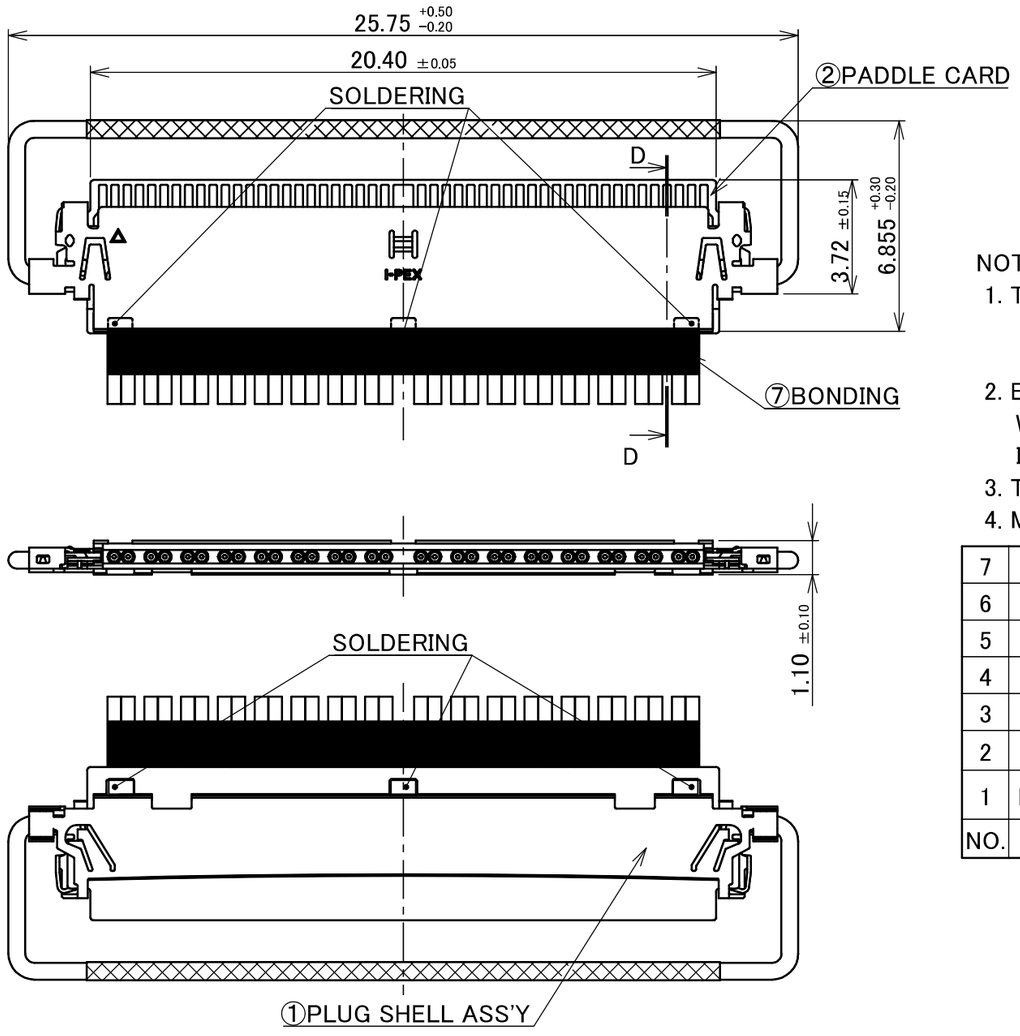

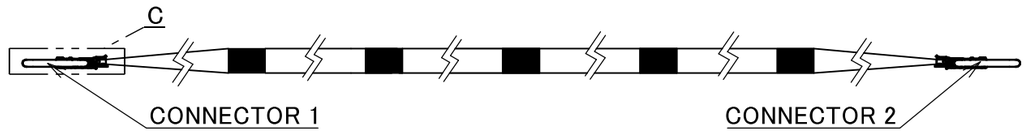

NOTE.
1. TO HANDLE THIS CONNECTOR :
   YOU MUST READ AND FOLLOW THE INSTRUCTION MANUAL BELOW.
   I-PEX INSTRUCTION MANUAL No.HIM-23013.
2. ELECTRIC CHARACTERISTICS
   WITHSTANDING VOLTAGE: AC 250V LEAKAGE CURRENT 2.0mA MAX.
   INSULATION RESISTANCE: 50MΩ MIN. DC 100V
3. THE OPERATING TEMPERATURE OF THE HARNESS: 80℃MAX.
4. MINIMUM HARNESS LENGTH: 85mm

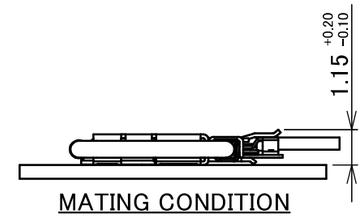

MATING CONDITION

NO.	DESCRIPTION	PARTS NO.	QTY	REMARKS
7	BONDING	–	–	UV GLUE
6	ACETATE TAPE	–	5	BLACK
5	GROUND-FINGER	–	2	–
4	GROUND-BAR	–	2	–
3	CABLE	–	32	MICRO-COAXIAL CABLE AWG #38, 45 OHM, BLUE
2	PADDLE CARD	3660-0501	2	CONNECTOR 1&2 CABLINE®-CAP PLUG SHELL ASS'Y P/N: 20993-050T-01 CONNECTOR TO BE MATED: 20525-050E-02
1	PLUG SHELL ASS'Y	20993-050T-01	2	

ANGLE	±2°	6 OVER 30 MAX.	±0.3	PROJECTION	SERIES No. IH-230010
6 MAX.	±0.2	30 OVER 120 MAX.	±0.5		CUSTOMER COPY
GENERAL TOLERANCE.				TITLE: CABLINE®-CAP 50P PADDLE CARD HARNESS	SCALE 2:1
DWG.	DATE				UNIT mm
CHK.					I-PEX
APP.				DWG. No. 81863	SIZE A3 / SHEET 2/3 / REV. 3

I-PEX PART No.
81863-100B-01
81863-100B-02

PIN ASSIGNMENT

PIN ASSIGNMENT		
CONNECTOR 1	CABLE	CONNECTOR 2
50	NO CABLE	1
49	MICRO-COAXIAL CABLE, AWG #38, 45 OHM, BLUE	2
48	MICRO-COAXIAL CABLE, AWG #38, 45 OHM, BLUE	3
47	NO CABLE	4
46	MICRO-COAXIAL CABLE, AWG #38, 45 OHM, BLUE	5
・ ・ ・	・ ・ ・	・ ・ ・
30	MICRO-COAXIAL CABLE, AWG #38, 45 OHM, BLUE	21
29	NO CABLE	22
28	MICRO-COAXIAL CABLE, AWG #38, 45 OHM, BLUE	23
27	MICRO-COAXIAL CABLE, AWG #38, 45 OHM, BLUE	24
26	NO CABLE	25
25	NO CABLE	26
24	MICRO-COAXIAL CABLE, AWG #38, 45 OHM, BLUE	27
23	MICRO-COAXIAL CABLE, AWG #38, 45 OHM, BLUE	28
22	NO CABLE	29
21	MICRO-COAXIAL CABLE, AWG #38, 45 OHM, BLUE	30
・ ・ ・	・ ・ ・	・ ・ ・
5	MICRO-COAXIAL CABLE, AWG #38, 45 OHM, BLUE	46
4	NO CABLE	47
3	MICRO-COAXIAL CABLE, AWG #38, 45 OHM, BLUE	48
2	MICRO-COAXIAL CABLE, AWG #38, 45 OHM, BLUE	49
1	NO CABLE	50

ANGLE ±2°	6 OVER 30 MAX. ±0.3	PROJECTION	SERIES No.	CUSTOMER COPY	
6 MAX. ±0.2	30 OVER 120 MAX. ±0.5		IH-230010		
GENERAL TOLERANCE.		TITLE		SCALE	
DWG. DATE		CABLINE®-CAP 50P PADDLE CARD HARNESS		2:1	I-PEX
CHK.				UNIT mm	
APP.		DWG. No. 81863		SIZE A3	SHEET 3/3 REV. 3