PART NO.
20387-006E

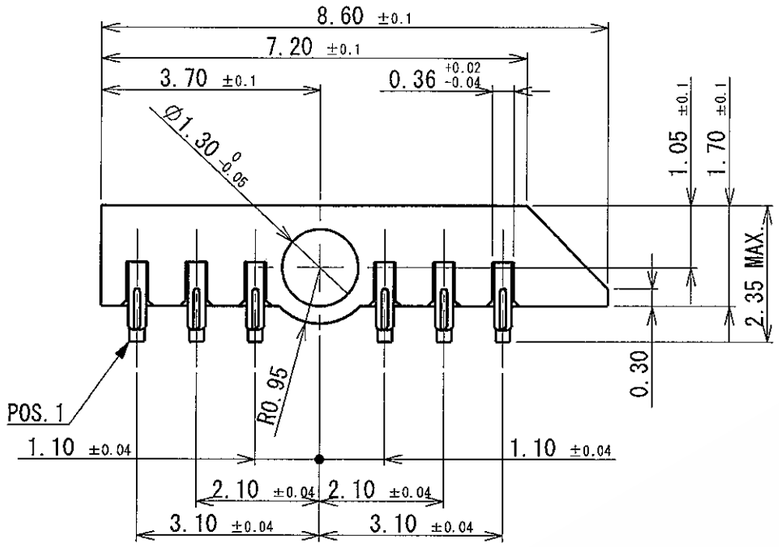

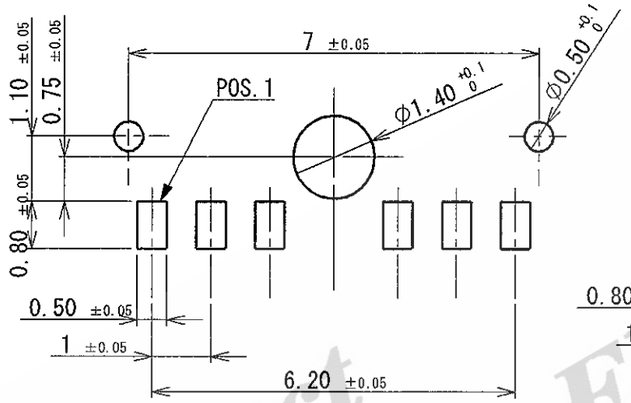

RECOMMENDED PCB LAYOUT

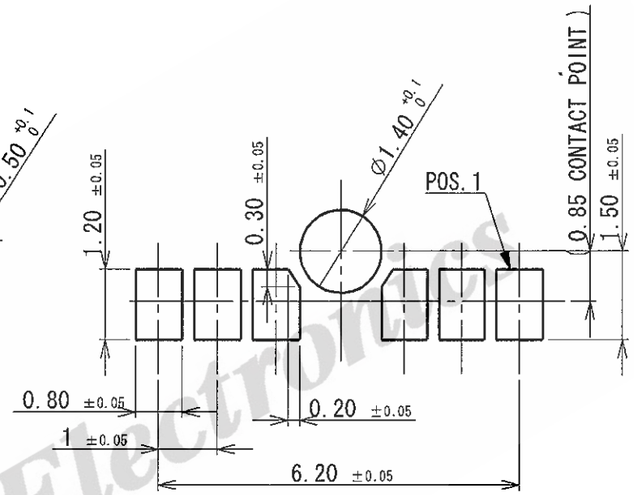

RECOMMENDED FPC PAD LAYOUT

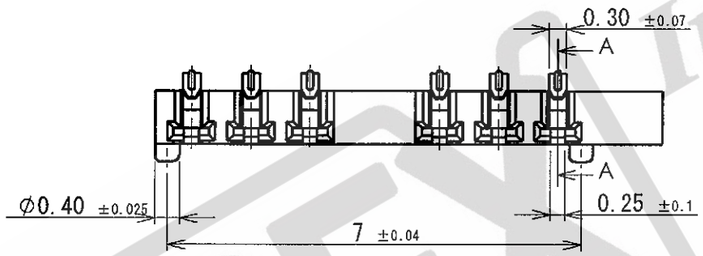

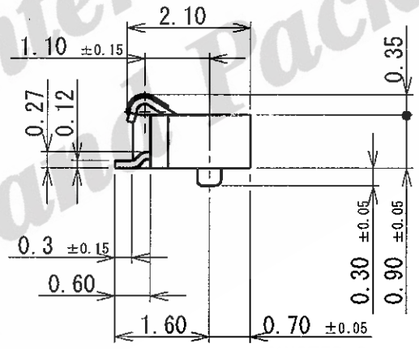

※NOTES.3

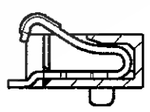

SECT. A-A

NOTES.
1.MATERIAL
HOUSING : LCP (GF REINFORCED) UL94V-0 BLACK
CONTACT:PHOSPHOR BRONZE
FINISH: Au OVER Ni PLATING
2.CONTACT TAIL COPLANARITY: 0.1 MAX.
3.GAP BETWEEN RIGHT AND LEFT: 0.03MAX.

GENERAL TOLERANCE	
6 MAX.	±0.2
6 OVER MAX. 30	±0.3
30 OVER MAX. 120	±0.5
ANGLE	±2°

I-PEX Interconnect and Packaging Electronics TOKYO,JAPAN

TITLE SPM6P CONN.

SCALE	UNIT	DWG. No.	SHEET	REV.
10:1	mm	20387	1/1	2

I-PEX Interconnect and Packaging Electronics

FORM REV.4

WAS T